ELINKS PAKISTAN

EFEN (GERMANY)

FUSE LINKS

Made in Hungary

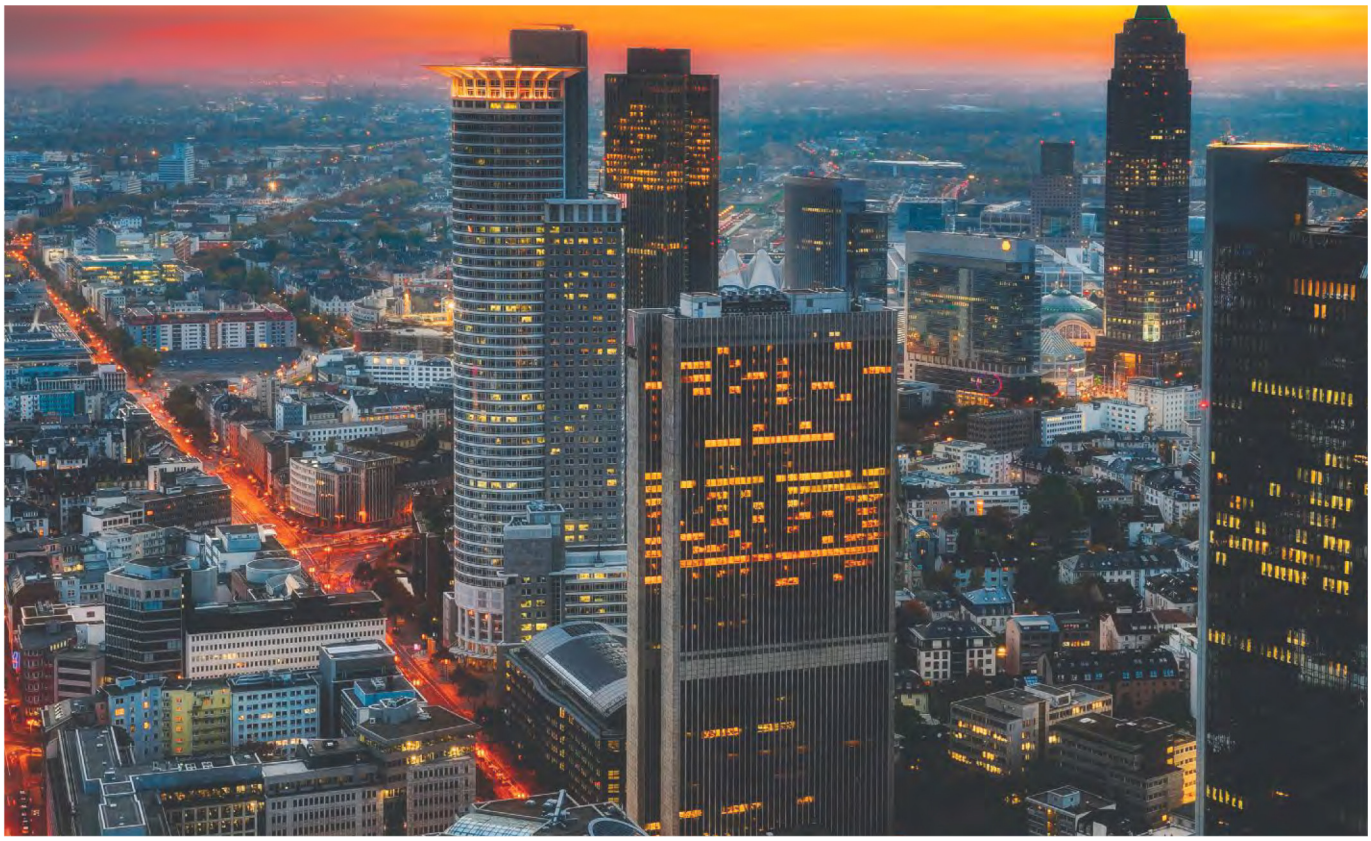

The Core of Safe Power Distribution

Grown from our traditional core competence, we at EFEN offer a comprehensive range of fuse-links according to IEC/DIN standards for low-voltage and medium-voltage applications. Our innovative high-tech products protect people and investments and ensure maximum availability.

NH Fuse-Links

Complete range of NH Fuse-links for cable, line, transformer and semiconductor protection. In addition to standard applications, the EFEN range includes various solutions for special applications. NH fuse-links by EFEN comply with national and international standards and regulations such as IEC 60269 and VDE 0636.

DC Fuse-Links 10 x 38

EFEN DC fuse-links 10 x 38 have been developed especially for direct-current supplies. They combine high energy density with a compact, space-saving design.

D0 Fuse-Links

The D0 fuse-links offer protection within the smallest space and, thanks to state-of-the-art distribution components, perfectly integrate into future systems.

HV Fuse-Links

EFEN's general-purpose and back-up fuse-links are a reliable safety interface for transformers, capacitors and high-voltage motors. The range comprises types for indoor, outdoor and oil-submerged applications and is nationally and internationally approved.

ELINKS PAKISTAN

EFEN (GERMANY)

NH Fuse-Links

NH Fuse-Links
AC 400 up to 690 V gG and gL

NH Fuse-Links
AC 500 V gR

NH Fuse-Links
AC 400 V gTr

NH Fuse-Links
AC 1000 V gB/aM

NH Fuse-Links
AC 1500 V TF

NH Fuse-Links
DC 80 V

NH Fuse-Links
DC 550 V

NH Fuse-Links
DC 1000 V

NH Accessories for Fuse-Links

NH Fuse-Link 400 V
with twin indicator

NH Fuse-Links
for industry-specific applications, e.g. mining

gTr Fuse-Links
for transformer protection

NH Fuse-Links
up to 1500 V AC

gR NH Fuse-Links
for semiconductor protection

Special Fuse-Links
for DC applications

NH Fuse-Links 500 V gG

- Rated voltage: AC 500 V
- Utilization category: gG acc. to VDE 0636-2 and VDE 0636-1
- IEC 60269-2
- Breaking capacity AC: 120 kA
- Breaking capacity DC: see technical data

35000-0800

NH Fuse-Links for cable and line protection, 500 V AC gG

Features:
- Twin indicator
- Non-insulated metal gripping lug
- Copper fuse element

Designation	Size	Amps	PU	Product designation	Order no.
NH-SI 000 2A GG AC500V AK	000	2	3	NH-SI 000 2A GG AC500V AK	**35000-0020**
NH-SI 000 4,0A GG AC500V AK	000	4	3	NH-SI 000 4,0A GG AC500V AK	**35000-0040**
NH-SI 000 6A GG AC500V AK	000	6	3	NH-SI 000 6A GG AC500V AK	**35000-0060**
NH-SI 000 10A GG AC500V AK	000	10	3	NH-SI 000 10A GG AC500V AK	**35000-0100**
NH-SI 000 16A GG AC500V AK	000	16	3	NH-SI 000 16A GG AC500V AK	**35000-0160**
NH-SI 000 20A GG AC500V AK	000	20	3	NH-SI 000 20A GG AC500V AK	**35000-0200**
NH-SI 000 25A GG AC500V AK	000	25	3	NH-SI 000 25A GG AC500V AK	**35000-0250**
NH-SI 000 32A GG AC500V AK	000	32	3	NH-SI 000 32A GG AC500V AK	**35000-0320**
NH-SI 000 35A GG AC500V AK	000	35	3	NH-SI 000 35A GG AC500V AK	**35000-0350**
NH-SI 000 40A GG AC500V AK	000	40	3	NH-SI 000 40A GG AC500V AK	**35000-0400**
NH-SI 000 50A GG AC500V AK	000	50	3	NH-SI 000 50A GG AC500V AK	**35000-0500**
NH-SI 000 63A GG AC500V AK	000	63	3	NH-SI 000 63A GG AC500V AK	**35000-0630**
NH-SI 000 80A GG AC500V AK	000	80	3	NH-SI 000 80A GG AC500V AK	**35000-0800**
NH-SI 000 100A GG AC500V AK	000	100	3	NH-SI 000 100A GG AC500V AK	**35000-1000**
NH-SI 00 25A GG AC500V AK	00	16	3	NH-SI 00 16A GG AC500V AK	**35011-0050**
NH-SI 00 25A GG AC500V AK	00	20	3	NH-SI 00 20A GG AC500V AK	**35011-0060**
NH-SI 00 25A GG AC500V AK	00	25	3	NH-SI 00 25A GG AC500V AK	**35011-0070**
NH-SI 00 32A GG AC500V AK	00	32	3	NH-SI 00 32A GG AC500V AK	**35011-0080**
NH-SI 00 35A GG AC500V AK	00	35	3	NH-SI 00 35A GG AC500V AK	**35011-0090**
NH-SI 00 40A GG AC500V AK	00	40	3	NH-SI 00 40A GG AC500V AK	**35011-0100**
NH-SI 00 50A GG AC500V AK	00	50	3	NH-SI 00 50A GG AC500V AK	**35011-0110**
NH-SI 00 63A GG AC500V AK	00	63	3	NH-SI 00 63A GG AC500V AK	**35011-0120**
NH-SI 00 80A GG AC500V AK	00	80	3	NH-SI 00 80A GG AC500V AK	**35011-0130**
NH-SI 00 100A GG AC500V AK	00	100	3	NH-SI 00 100A GG AC500V AK	**35011-0140**
NH-SI 00 125A GG AC500V AK	00	125	3	NH-SI 00 125A GG AC500V AK	**35011-0150**
NH-SI 00 160A GG AC500V AK	00	160	3	NH-SI 00 160A GG AC500V AK	**35011-1090**
NH-SI 1/25A GG AC500V AK	1	25	3	NH-SI 1/ 25A GG AC500V AK	**35035-0050**
NH-SI 1/32A GG AC500V AK	1	32	3	NH-SI 1/ 32A GG AC500V AK	**35035-1220**
NH-SI 1/35A GG AC500V AK	1	35	3	NH-SI 1/ 35A GG AC500V AK	**35035-0060**
NH-SI 1/40A GG AC500V AK	1	40	3	NH-SI 1/ 40A GG AC500V AK	**35035-1230**
NH-SI 1/50A GG AC500V AK	1	50	3	NH-SI 1/ 50A GG AC500V AK	**35035-0070**
NH-SI 1/63A GG AC500V AK	1	63	3	NH-SI 1/ 63A GG AC500V AK	**35035-0080**
NH-SI 1/80A GG AC500V AK	1	80	3	NH-SI 1/ 80A GG AC500V AK	**35035-0090**
NH-SI 1/100A GG AC500V AK	1	100	3	NH-SI 1/ 100A GG AC500V AK	**35035-0100**
NH-SI 1/125A GG AC500V AK	1	125	3	NH-SI 1 125A GG AC500V AK	**35035-0110**
NH-SI 1/160A GG AC500V AK	1	160	3	NH-SI 1 160A GG AC500V AK	**35035-0120**
NH-SI 1 200A GG AC500V AK	1	200	3	NH-SI 1 200A GG AC500V AK	**35035-0130**
NH-SI 1 224A GG AC500V AK	1	224	3	NH-SI 1 224A GG AC500V AK	**35035-0140**
NH-SI 1 250A GG AC500V AK	1	250	3	NH-SI 1 250A GG AC500V AK	**35035-0150**

NH Fuse-Links 500 V gG

- Rated voltage: AC 500 V
- Utilization category: gG acc. to VDE 0636-2 and VDE 0636-1
- IEC 60269 -2
- Breaking capacity AC: 120 kA
- Breaking capacity DC: see technical data

35054-0150

NH Fuse-Links for cable and line protection, 500 V AC gG

Features:
- Twin indicator (size 4a with center indicator)
- Non-insulated metal gripping lug
- Copper fuse element

Designation	Size	Amps	PU	Product designation	Order no.
NH-SI 2/25A GG AC500V AK	2	25	3	NH-SI 2/ 25A GG AC500V AK	**35054-0010**
NH-SI 2/35A GG AC500V AK	2	35	3	NH-SI 2/ 35A GG AC500V AK	**35054-0020**
NH-SI 2/50A GG AC500V AK	2	50	3	NH-SI 2/ 50A GG AC500V AK	**35054-0030**
NH-SI 2/63A GG AC500V AK	2	63	3	NH-SI 2/ 63A GG AC500V AK	**35054-0040**
NH-SI 2/80A GG AC500V AK	2	80	3	NH-SI 2/ 80A GG AC500V AK	**35054-0050**
NH-SI 2/100A GG AC500V AK	2	100	3	NH-SI 2/ 100A GG AC500V AK	**35054-0060**
NH-SI 2/125A GG AC500V AK	2	125	3	NH-SI 2/ 125A GG AC500V AK	**35054-0070**
NH-SI 2/160A GG AC500V AK	2	160	3	NH-SI 2/ 160A GG AC500V AK	**35054-0080**
NH-SI 2/200A GG AC500V AK	2	200	3	NH-SI 2/ 200A GG AC500V AK	**35054-0090**
NH-SI 2/224A GG AC500V AK	2	224	3	NH-SI 2/ 224A GG AC500V AK	**35054-0100**
NH-SI 2/250A GG AC500V AK	2	250	3	NH-SI 2/ 250A GG AC500V AK	**35054-0110**
NH-SI 2 300A GG AC500V AK	2	300	3	NH-SI 2 300A GG AC500V AK	**35054-0120**
NH-SI 2 315A GG AC500V AK	2	315	3	NH-SI 2 315A GG AC500V AK	**35054-0130**
NH-SI 2 355A GG AC500V AK	2	355	3	NH-SI 2 355A GG AC500V AK	**35054-0140**
NH-SI 2 400A GG AC500V AK	2	400	3	NH-SI 2 400A GG AC500V AK	**35054-0150**
NH-SI 3/63A GG AC500V AK	3	63	3	NH-SI 3/ 63A GG AC500V AK	**35078-0340**
NH-SI 3/80A GG AC500V AK	3	80	3	NH-SI 3/ 80A GG AC500V AK	**35078-0350**
NH-SI 3/100A GG AC500V AK	3	100	3	NH-SI 3/ 100A GG AC500V AK	**35078-0360**
NH-SI 3/125A GG AC500V AK	3	125	3	NH-SI 3/ 125A GG AC500V AK	**35078-0370**
NH-SI 3/160A GG AC500V AK	3	160	3	NH-SI 3/ 160A GG AC500V AK	**35078-0380**
NH-SI 3/200A GG AC500V AK	3	200	3	NH-SI 3/ 200A GG AC500V AK	**35078-0390**
NH-SI 3/224A GG AC500V AK	3	224	3	NH-SI 3/ 224A GG AC500V AK	**35078-0400**
NH-SI 3/250A GG AC500V AK	3	250	3	NH-SI 3/ 250A GG AC500V AK	**35078-0410**
NH-SI 3/300A GG AC500V AK	3	300	3	NH-SI 3/ 300A GG AC500V AK	**35078-0190**
NH-SI 3/315A GG AC500V AK	3	315	3	NH-SI 3/ 315A GG AC500V AK	**35078-0010**
NH-SI 3/355A GG AC500V AK	3	355	3	NH-SI 3/ 355A GG AC500V AK	**35078-0020**
NH-SI 3/400A GG AC500V AK	3	400	3	NH-SI 3/ 400A GG AC500V AK	**35078-0030**
NH-SI 3 500A GG AC500V AK	3	500	3	NH-SI 3 500A GG AC500V AK	**35078-0050**
NH-SI 3 630A GG AC500V AK	3	630	3	NH-SI 3 630A GG AC500V AK	**35078-0060**
NH-SI 4A 400A GG AC500V	4a	400	3	NH-SI 4A 400A GG AC500V	**35097-0120**
NH-SI 4A 500A GG AC500V	4a	500	3	NH-SI 4A 500A GG AC500V	**35097-0010**
NH-SI 4A 630A GG AC500V	4a	630	3	NH-SI 4A 630A GG AC500V	**35097-0020**
NH-SI 4A 800A GG AC500V	4a	800	1	NH-SI 4A 800A GG AC500V	**35097-0030**
NH-SI 4A 1000A GG AC500V	4a	1000	1	NH-SI 4A 1000A GG AC500V	**35097-0040**
NH-SI 4A 1250A GG AC500V	4a	1250	1	NH-SI 4A 1250A GG AC500V	**35097-0050**
NH-SI 4A 1600A GG AC500V	4a	1600	1	NH-SI 4A 1600A GG AC500V	**35097-0110**

NH Fuse-Links 500 V gR

- Rated voltage: AC 500 V
- Utilization category: gR acc. to VDE 0636-4
- Application: for semiconductor protection
- Breaking capacity AC: 120 kA
- Breaking capacity DC: see technical data

35060-0150

NH Fuse-Links for semiconductor protection, 500 V AC gR

Features:
- Center indicator
- Non-insulated metal gripping lug
- Pure silver fuse element
- Striker for fuse monitoring

Designation	Size	Amps	PU	Product designation	Order no.
NH-SI 00 16A GR AC500V SM	00	16	10	NH-SI 00 16A GR AC500V SM	**35218-0010**
NH-SI 00 20A GR AC500V SM	00	20	10	NH-SI 00 20A GR AC500V SM	**35218-0020**
NH-SI 00 25A GR AC500V SM	00	25	10	NH-SI 00 25A GR AC500V SM	**35218-0030**
NH-SI 00 35A GR AC500V SM	00	35	10	NH-SI 00 35A GR AC500V SM	**35218-0040**
NH-SI 00 40A GR AC500V SM	00	40	10	NH-SI 00 40A GR AC500V SM	**35218-0050**
NH-SI 00 50A GR AC500V SM	00	50	10	NH-SI 00 50A GR AC500V SM	**35218-0060**
NH-SI 00 63A GR AC500V SM	00	63	10	NH-SI 00 63A GR AC500V SM	**35218-0070**
NH-SI 00 80A GR AC500V SM	00	80	10	NH-SI 00 80A GR AC500V SM	**35218-0080**
NH-SI 00 100A GR AC500V SM	00	100	10	NH-SI 00 100A GR AC500V SM	**35218-0090**
NH-SI 00 125A GR AC500V SM	00	125	10	NH-SI 00 125A GR AC500V SM	**35218-0100**
NH-SI 1 35A GR AC500V LS SM	1	35	1	NH-SI 1 35A GR AC500V LS SM	**35046-0010**
NH-SI 1 50A GR AC500V LS SM	1	50	1	NH-SI 1 50A GR AC500V LS SM	**35046-0020**
NH-SI 1 63A GR AC500V LS SM	1	63	1	NH-SI 1 63A GR AC500V LS SM	**35046-0030**
NH-SI 1 80A GR AC500V LS SM	1	80	1	NH-SI 1 80A GR AC500V LS SM	**35046-0040**
NH-SI 1 100A GR AC500V LS SM	1	100	1	NH-SI 1 100A GR AC500V LS SM	**35046-0050**
NH-SI 1 160A GR AC500V LS SM	1	160	1	NH-SI 1 160A GR AC500V LS SM	**35046-0070**
NH-SI 1 200A GR AC500V LS SM	1	200	1	NH-SI 1 200A GR AC500V LS SM	**35046-0080**
NH-SI 1 224A GR AC500V LS SM	1	224	1	NH-SI 1 224A GR AC500V LS SM	**35046-0090**
NH-SI 1 250A GR AC500V LS SM	1	250	1	NH-SI 1 250A GR AC500V LS SM	**35046-0100**
NH-SI 2 80A GR AC500V LS SM	2	80	1	NH-SI 2 80A GR AC500V LS SM	**35060-0050**
NH-SI 2 100A GR AC500V LS SM	2	100	1	NH-SI 2 100A GR AC500V LS SM	**35060-0060**
NH-SI 2 125A GR AC500V LS SM	2	125	1	NH-SI 2 125A GR AC500V LS SM	**35060-0070**
NH-SI 2 160A GR AC500V LS SM	2	160	1	NH-SI 2 160A GR AC500V LS SM	**35060-0080**
NH-SI 2 200A GR AC500V LS SM	2	200	1	NH-SI 2 200A GR AC500V LS SM	**35060-0090**
NH-SI 2 224A GR AC500V LS SM	2	224	1	NH-SI 2 224A GR AC500V LS SM	**35060-0100**
NH-SI 2 250A GR AC500V LS SM	2	250	1	NH-SI 2 250A GR AC500V LS SM	**35060-0110**
NH-SI 2 300A GR AC500V LS SM	2	300	1	NH-SI 2 300A GR AC500V LS SM	**35060-0120**
NH-SI 2 315A GR AC500V LS SM	2	315	1	NH-SI 2 315A GR AC500V LS SM	**35060-0130**
NH-SI 2 355A GR AC500V LS SM	2	355	1	NH-SI 2 355A GR AC500V LS SM	**35060-0140**
NH-SI 2 400A GR AC500V LS SM	2	400	1	NH-SI 2 400A GR AC500V LS SM	**35060-0150**
NH-SI 3 315A GR AC500V LS SM	3	315	1	NH-SI 3 315A GR AC500V LS SM	**35086-0010**
NH-SI 3 355A GR AC500V LS SM	3	355	1	NH-SI 3 355A GR AC500V LS SM	**35086-0020**
NH-SI 3 400A GR AC500V LS SM	3	400	1	NH-SI 3 400A GR AC500V LS SM	**35086-0030**
NH-SI 3 425A GR AC500V LS SM	3	425	1	NH-SI 3 425A GR AC500V LS SM	**35086-0040**
NH-SI 3 500A GR AC500V LS SM	3	500	1	NH-SI 3 500A GR AC500V LS SM	**35086-0050**
NH-SI 3 630A GR AC500V LS SM	3	630	1	NH-SI 3 630A GR AC500V LS SM	**35086-0060**

NH Fuse-Links AC 500 V gG

Dimensions acc. t Indicator 000 Indicator 00 – 4a

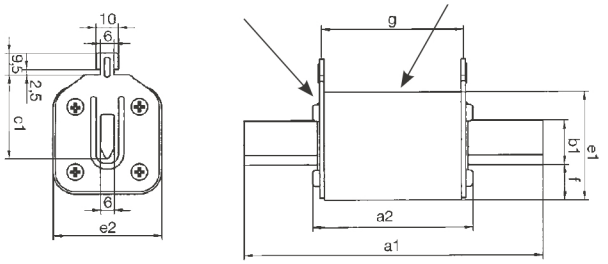

Size	Rated current	a_1	a_2	b_1	c_1	e_1	e_2	g
000		78,5	53	15	35	40	21	47
00	max. 160 A	78,5	53	15	35	47	30	47
1	max. 160 A	135	71	15	40	47	30	65
1	200 – 250 A	135	71	20	40	52	40	65
2	max. 250 A	150	72	20	48	52	40	65
2	300 – 400 A	150	72	26	48	60	51	65
3	max. 400 A	150	72	26	60	60	51	65
3	500 – 630 A	150	72	33	60	74	70	65
4a		200	96	50	85	109	98	86

For cable and line protection
Rated voltage: AC 500 V / DC see page 37
Utilization category: gG acc. to VDE 0636-2 and VDE 0636-1, IEC 60269-1, IEC 60269-2
Application: For cable and line protection
Breaking capacity: 120 kA (AC 500 V) / DC

Electrical characteristics:
The time/current characteristics are matched to the cable and line capacities. Accordingly, the lines protected can be operated at optimal load as the breaking in case of overload is slow, but quick in the event of a short-circuit.
Even if devices of different brands are used that comply with the specifications, the definition of time-current ranges for category gG according to VDE 0636 and IEC 60269 ensures a selectivity of 1:1.6 at rated currents of ≥ 16 Amps.

Size	Amps	PU	Non-insulated metal gripping lugs Order no.	Insulated plastic gripping lugs Order no.	Insulated metal gripping lugs Order no.
000	2	3	35000-0020	35001-0020	
000	4	3	35000-0040	35001-0040	
000	6	3	35000-0060	35001-0060	
000	10	3	35000-0100	35001-0100	
000	16	3	35000-0160	35001-0160	
000	20	3	35000-0200	35001-0200	
000	25	3	35000-0250	35001-0250	
000	32	3	35000-0320	35001-0320	
000	35	3	35000-0350	35001-0350	
000	40	3	35000-0400	35001-0400	
000	50	3	35000-0500	35001-0500	
000	63	3	35000-0630	35001-0630	
000	80	3	35000-0800	35001-0800	
000	100	3	35000-1000	35001-1000	
00	2	3	35011-0010		35165-0010
00	4	3	35011-0020		35165-0020
00	6	3	35011-0030		35165-0030
00	10	3	35011-0040		35165-0040
00	16	3	35011-0050		35165-0050
00	20	3	35011-0060		35165-0060
00	25	3	35011-0070		35165-0070
00	32	3	35011-0080		35165-0080
00	35	3	35011-0090		35165-0090
00	40	3	35011-0100		35165-0100
00	50	3	35011-0110		35165-0110
00	63	3	35011-0120		35165-0120
00	80	3	35011-0130		35165-0130
00	100	3	35011-0140		35165-0140
00	125	3	35011-0150		35165-0150
00	160	3	35011-1090		35165-0160
1	25	3	35035-0050		35204-0050
1	32	3	35035-1220		35204-0160
1	35	3	35035-0060		35204-0060
1	40	3	35035-1230		35204-0170
1	50	3	35035-0070		35204-0070
1	63	3	35035-0080		35204-0080
1	80	3	35035-0090		35204-0090
1	100	3	35035-0100		35204-0110
1	125	3	35035-0110		35204-0110
1	160	3	35035-0120		35204-0120
1	200	3	35035-0130		35204-0130
1	224	3	35035-0140		35204-0140
1	250	3	35035-0150		35204-0150

NH Fuse-Links AC 500 V gG

Size	Amps	PU	Non-insulated metal gripping lugs Order no.	Insulated metal gripping lugs Order no.
2	25	3	**35054-0010**	
2	35	3	**35054-0020**	
2	50	3	**35054-0030**	
2	63	3	**35054-0040**	**35116-0040**
2	80	3	**35054-0050**	**35116-0050**
2	100	3	**35054-0060**	**35116-0060**
2	125	3	**35054-0070**	**35116-0070**
2	160	3	**35054-0080**	**35116-0080**
2	200	3	**35054-0090**	**35116-0090**
2	224	3	**35054-0100**	**35116-0100**
2	250	3	**35054-0110**	**35116-0110**
2	(300)	3	**35054-0120**	**35116-0120**
2	315	3	**35054-0130**	**35116-0130**
2	(355)	3	**35054-0140**	**35116-0140**
2	400	3	**35054-0150**	**35116-0150**
3	63	3	**35078-0340**	**35420-1000**
3	80	3	**35078-0350**	**35420-1250**
3	100	3	**35078-0360**	**35420-1600**
3	125	3	**35078-0370**	**35420-2000**
3	160	3	**35078-0380**	**35420-2240**
3	200	3	**35078-0390**	**35420-2500**
3	224	3	**35078-0400**	**35420-3000**
3	250	3	**35078-0410**	**35420-3150**
3	(300)	3	**35078-0190**	**35420-3550**
3	315	3	**35078-0010**	**35420-4000**
3	(355)	3	**35078-0020**	**35420-4250**
3	400	3	**35078-0030**	**35420-5000**
3	(425)	3	**35078-0040**	**35420-6300**
3	500	3	**35078-0050**	
3	630	3	**35078-0060**	
4a	400	1	**35097-0120**	
4a	500	1	**35097-0010**	
4a	630	1	**35097-0020**	
4a	800	1	**35097-0030**	
4a	1000	1	**35097-0040**	
4a	1250	1	**35097-0050**	
4a	1600	1	**35097-0110**	

( ) = Dimensions according to DIN, rated current not standardized in VDE 0636

Breaking capacity DC 500 V gG fuses:

Size 000:	40 kA, 250 V DC
Size 00:	40 kA, 250V DC
Size 1:	40 kA, 250 V DC
	80 kA, 400 V DC
Size 2:	40 kA, 250 V DC
	80 kA, 440 V DC
Size 3:	40 kA, 250 V DC
	80 kA, 400 V DC
Size 4a:	80 kA, 440 V DC

NH Fuse-Links size 00 with striker

In combination with a micro switch, EFEN NH fuse-links size 00 with striker can be used for fuse monitoring.

Force-distance diagram of the striker

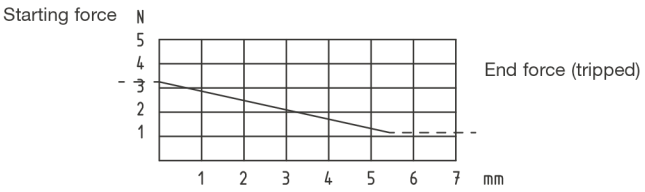

NH Fuse-Links for cable and line protection size 00, 500 V AC, utilization category gL/gG, with striker

Amps	Designation	Order no.
6	NH-Si 00 6A gL SM	**35207-0010**
10	NH-Si 00 10A gL SM	**35207-0020**
16	NH-Si 00 16A gL SM	**35207-0030**
20	NH-Si 00 20A gL SM	**35207-0040**
25	NH-Si 00 25A gL SM	**35207-0050**
32	NH-Si 00 32A gL SM	**35207-0060**
35	NH-Si 00 35A gL SM	**35207-0070**
40	NH-Si 00 40A gL SM	**35207-0080**
50	NH-Si 00 50A gL SM	**35207-0090**
63	NH-Si 00 63A gL SM	**35207-0100**
80	NH-Si 00 80A gL SM	**35207-0110**
100	NH-Si 00 100A gL SM	**35207-0120**
125	NH-Si 00 125A gL SM	**35207-0130**

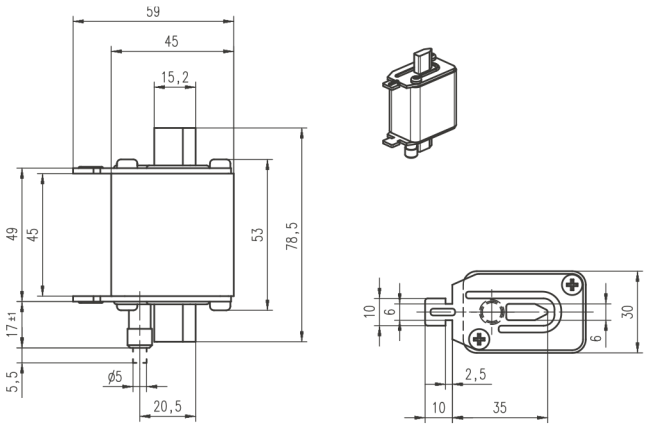

For cable and line protection
Time-current characteristics NH Fuse-Links size 000 acc. to VDE 0636-2 and IEC/EN 60269-2

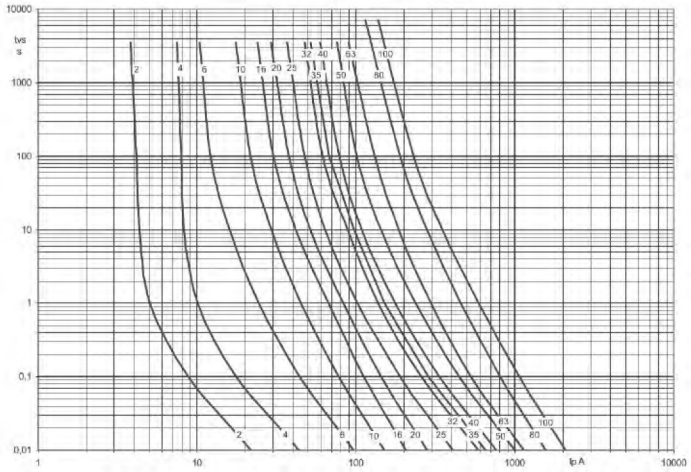

Time-current characteristics NH Fuse-Links size 00 – 4a gG 500 V AC acc. to VDE 0636-2 and IEC/EN 60269-2

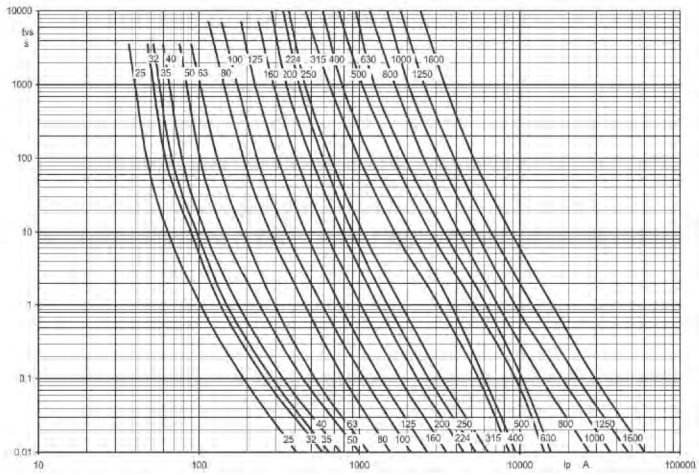

Cut-out current characteristics acc. to VDE 0636-2 and IEC/EN 60269-2

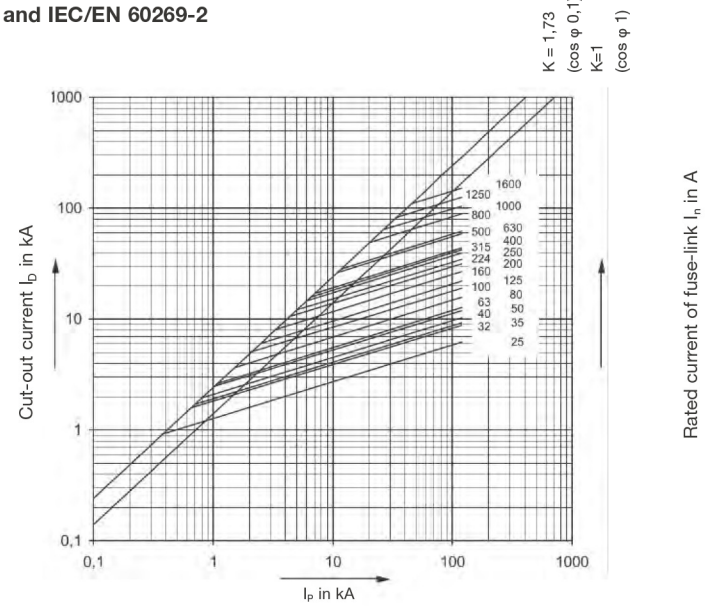

I_p acc. to prospective short-circuit current I_k at point of fault (DIN/VDE 0102 part 2)

NH Fuse-Links for DC applications up to 80 V - series TPS

35300-0600

TPS fault terminator Fuse-Links

Features:
- Compact design
- Use only with TPS fuse isolators

Designation	Size	Amps	PU	Product designation	Order no.
TPS FAULT TERMINATOR 60 A	00	60	3	U TPS FAULT TERMINATOR 60A	**35300-0060**
TPS FAULT TERMINATOR 80 A	00	80	3	U TPS FAULT TERMINATOR 80A	**35300-0080**
TPS FAULT TERMINATOR 100 A	00	100	3	U TPS FAULT TERMINATOR 100A	**35300-0100**
TPS FAULT TERMINATOR 150 A	00	150	3	U TPS FAULT TERMINATOR 150A	**35300-0150**
TPS FAULT TERMINATOR 200 A	00	200	3	U TPS FAULT TERMINATOR 200A	**35300-0200**
TPS FAULT TERMINATOR 250 A	00	250	3	U TPS FAULT TERMINATOR 250A	**35300-0250**
TPS FAULT TERMINATOR 300 A	00	300	3	U TPS FAULT TERMINATOR 300A	**35300-0300**
TPS FAULT TERMINATOR 400 A	00	400	3	U TPS FAULT TERMINATOR 400A	**35300-0400**
TPS FAULT TERMINATOR 500 A	00	500	3	U TPS FAULT TERMINATOR 500A	**35300-0500**
TPS FAULT TERMINATOR 600 A	00	600	3	U TPS FAULT TERMINATOR 600A	**35300-0600**
TPS FAULT TERMINATOR 800 A	2	800	1	U TPS FAULT TERMINATOR 800A	**35330-0800**
TPS FAULT TERMINATOR 1000 A	2	1000	1	U TPS FAULT TERMINATOR 1000A	**35330-1000**
TPS FAULT TERMINATOR 1200 A	2	1200	1	U TPS FAULT TERMINATOR 1200A	**35330-1200**
TPS FAULT TERMINATOR 1600 A	2	1600	1	U TPS FAULT TERMINATOR 1600A	**35330-1600**

35301-0100

TPS Fault Terminator with striker for fuse-monitoring

Features:
- Compact design
- Use only with TPS fuse isolators

Designation	Size	Amps	PU	Product designation	Order no.
TPS FAULT TERMINATOR 60 A SM	00	60	3	U TPS FAULT TERMINATOR 60A SM	**35301-0060**
TPS FAULT TERMINATOR 80 A SM	00	80	3	U TPS FAULT TERMINATOR 80A SM	**35301-0080**
TPS FAULT TERMINATOR 100 A SM	00	100	3	U TPS FAULT TERMINATOR 100A SM	**35301-0100**
TPS FAULT TERMINATOR 150 A SM	00	150	3	U TPS FAULT TERMINATOR 150A SM	**35301-0150**
TPS FAULT TERMINATOR 200 A SM	00	200	3	U TPS FAULT TERMINATOR 200A SM	**35301-0200**
TPS FAULT TERMINATOR 250 A SM	00	250	3	U TPS FAULT TERMINATOR 250A SM	**35301-0250**
TPS FAULT TERMINATOR 300 A SM	00	300	3	U TPS FAULT TERMINATOR 300A SM	**35301-0300**
TPS FAULT TERMINATOR 400 A SM	00	400	3	U TPS FAULT TERMINATOR 400A SM	**35301-0400**
TPS FAULT TERMINATOR 500 A SM	00	500	3	U TPS FAULT TERMINATOR 500A SM	**35301-0500**
TPS FAULT TERMINATOR 600 A SM	00	600	3	U TPS FAULT TERMINATOR 600A SM	**35301-0600**

NH Fuse-Links for DC applications up to 550 V

35178-0020

NH battery fuse DC 550 V

Features:
- Clear identification for protection against mix-up
- Selection guide 56

Designation	Size	Amps	PU	Product designation	Order no.
NH-BATTERIESICHERUNG 00 E	00		3	NH-BATTERIESICHERUNG 00 E	**35177-0010**
NH-BATTERIESICHERUNG 00 G	00		3	NH-BATTERIESICHERUNG 00 G	**35177-0030**
NH-BATTERIESICHERUNG 00 H	00		3	NH-BATTERIESICHERUNG 00 H	**35177-0040**
NH-BATTERIESICHERUNG 00 A	00		3	NH-BATTERIESICHERUNG 00 A	**35177-0050**
NH-BATTERIESICHERUNG 00 B	00		3	NH-BATTERIESICHERUNG 00 B	**35177-0060**
NH-BATTERIESICHERUNG 00 C	00		3	NH-BATTERIESICHERUNG 00 C	**35177-0070**
NH-BATTERIESICHERUNG 00 D	00		3	NH-BATTERIESICHERUNG 00 D	**35177-0080**
NH-BATTERIESICHERUNG 1 A	2C		3	NH-BATTERIESICHERUNG 1 A	**35178-0010**
NH-BATTERIESICHERUNG 1 B	2C		3	NH-BATTERIESICHERUNG 1 B	**35178-0020**
NH-BATTERIESICHERUNG 1 C	2C		3	NH-BATTERIESICHERUNG 1 C	**35178-0030**
NH-BATTERIESICHERUNG 2 A	2		3	NH-BATTERIESICHERUNG 2 A	**35179-0010**
NH-BATTERIESICHERUNG 2 B	2		3	NH-BATTERIESICHERUNG 2 B	**35179-0020**
NH-BATTERIESICHERUNG 3 A	3		1	NH-BATTERIESICHERUNG 3 A	**35180-0010**
NH-BATTERIESICHERUNG 3 B	3		1	NH-BATTERIESICHERUNG 3 B	**35180-0020**
NH-BATTERIESICHERUNG 3 C	3		1	NH-BATTERIESICHERUNG 3 C	**35180-0030**
NH-BATTERIESICHERUNG 4 C	4a		1	NH-BATTERIESICHERUNG 4 C	**35183-0020**
NH-BATTERIESICHERUNG 4 D	4a		1	NH-BATTERIESICHERUNG 4 D	**35183-0030**
NH-BATTERIESICHERUNG 4 E	4a		1	NH-BATTERIESICHERUNG 4 E	**35183-0040**

NH Fuse-Links for DC applications up to 80 V, series TPS

TPS Fault Terminator

TPS 00/60 – 600 A

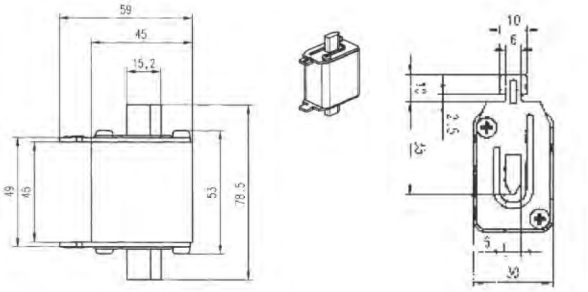

TPS 00/60 – 600 A with striker

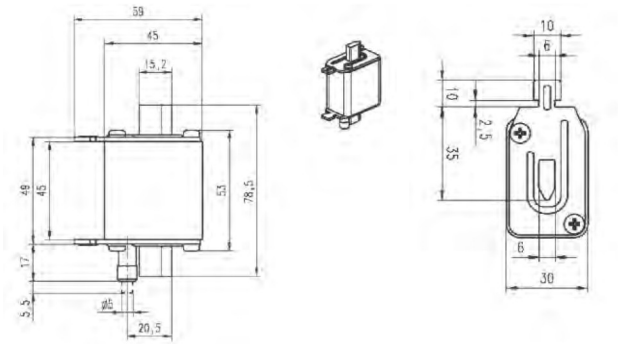

TPS 2/800 – 1600 A

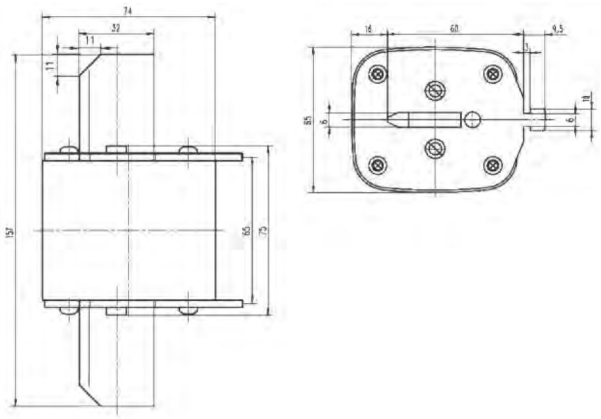

Rated power dissipation in Watts of TPS Fault Terminator size 00

I_n [A]	Fuse-link	Fuse-link with switch
60	4,5	5
80	5	5,5
100	6,5	7,8
150	10	13
200	12	17
250	13	21
300	16	23
400	19,5	32
500	26	43
600	29	54

Rated power dissipation in Watts of TPS Fault Terminator size 2

I_n [A]	Fuse-link	Fuse-link with switch
800	43	65
1000	57	89
1200	64	113
1600	95	155

Products for DC applications max. 550 V

1. Application
- Defined point of intersection between battery and UPS.
- Isolation of the battery during service and maintenance work.
- Protection of the battery against over-heating and mechanical damage in the case of short-circuits.

2. Selection criteria for EFEN battery switches and battery fuses
- Single-pole NH load-break switches in sizes from 00 to 4a are specifically suited to isolate and safeguard backup batteries in UPS applications. General-purpose line protection fuses are usually not suitable for use in these applications. Fast-acting fuses must be used. The extra heat coming from these fuse-links has to be taken into account when selecting suitable fuse switches. EFEN uses highly temperature-resistant materials that allow for optimum space utilization and reliable operation.
- Specific care must be taken to select the correct fuse-links for battery protection. Fuse elements for UPS systems must be resistant to ageing in order to prevent premature tripping under permissible load.
- The fuse-link characteristics must be carefully selected according to the UPS system and the battery rating in order to provide reliable full-range protection of the battery. EFEN offers expert support in this process. Pl*ease fill in and return the questionnaire (see next page).*

3. Features and benefits of EFEN battery switches and battery fuse-links for UPS.
- EFEN battery fuse-links provide superior short-circuit protection.
- Silver fuse elements resistant to ageing prevent premature inadvertent tripping.
- Low power dissipation prevents overheating of plastic components.
- Parallel contact isolation with two arcing chambers provides excellent DC breaking capacity.
- High thermal stability of plastics prevents overheating even under overload conditions.
- A complete range of fuse switches and fuse-links for optimal protection of all industry-standard UPS systems up to 550 V battery voltage.

ELINKS PAKISTAN

EFEN (GERMANY)

NH Fuse-Links for DC applications up to 550 V

Questionnaire – EFEN battery-switches and battery-fuses for UPS systems

Company:

Contact person:

Phone no. for technical information:

1. UPS system

1.1 Manufacturer:

1.2 Type:

1.3 Output:

1.4 Power factor:

1.5 Efficiency:

1.6 DC circuit voltage:

1.7 Acceptable overload:

2. Battery

2.1 Manufacturer:

2.2 Type:

2.3 Rated voltage:

2.4 Capacity:

2.5 Number of blocks:

2.6 Battery layout:

☐ a) one string ☐ b) circuit with a neutral point ☐ c) two separately protected strings ☐ d) other

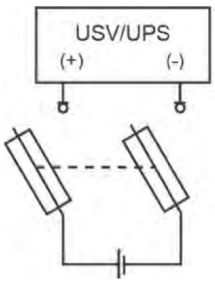

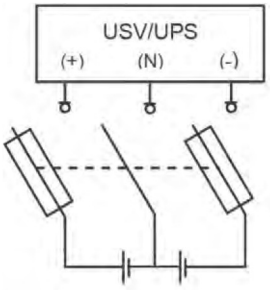

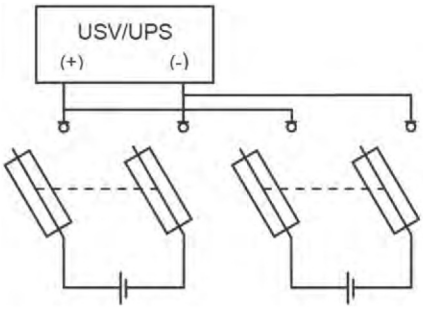

2.7 Operating time:

2.8 Final discharge voltage
(at the end of operating time):

2.9 Acceptable overload:

Place, date:

Completed by:
(Signature)

NH Fuse-Links for DC applications up to 550 V

NH battery fuses DC 550 V for uninterruptible power supplies (UPS)

Description	Size	Type	Designation	PU	Weight in kg	Order no.
NH battery fuse	00	00 E	NH-BATTERIESICHERUNG 00 E	3	0,148	**35177-0010**
NH battery fuse	00	00 G	NH-BATTERIESICHERUNG 00 G	3	0,148	**35177-0030**
NH battery fuse	00	00 H	NH-BATTERIESICHERUNG 00 H	3	0,148	**35177-0040**
NH battery fuse	00	00 A	NH-BATTERIESICHERUNG 00 A	3	0,148	**35177-0050**
NH battery fuse	00	00 B	NH-BATTERIESICHERUNG 00 B	3	0,148	**35177-0060**
NH battery fuse	00	00 C	NH-BATTERIESICHERUNG 00 C	3	0,148	**35177-0070**
NH battery fuse	00	00 D	NH-BATTERIESICHERUNG 00 D	3	0,148	**35177-0080**
NH battery fuse	2C	1 A	NH-BATTERIESICHERUNG 1 A	3	0,398	**35178-0010**
NH battery fuse	2C	1 B	NH-BATTERIESICHERUNG 1 B	3	0,398	**35178-0020**
NH battery fuse	2C	1 C	NH-BATTERIESICHERUNG 1 C	3	0,398	**35178-0030**
NH battery fuse	2	2 A	NH-BATTERIESICHERUNG 2 A	3	0,636	**35179-0010**
NH battery fuse	2	2 B	NH-BATTERIESICHERUNG 2 B	3	0,636	**35179-0020**
NH battery fuse	3	3 A	NH-BATTERIESICHERUNG 3 A	1	0,915	**35180-0010**
NH battery fuse	3	3 B	NH-BATTERIESICHERUNG 3 B	1	0,915	**35180-0020**
NH battery fuse	3	3 C	NH-BATTERIESICHERUNG 3 C	1	0,915	**35180-0030**
NH battery fuse	4a	4 C	NH-BATTERIESICHERUNG 4 C	1	2,589	**35183-0020**
NH battery fuse	4a	4 D	NH-BATTERIESICHERUNG 4 D	1	2,589	**35183-0030**
NH battery fuse	4a	4 E	NH-BATTERIESICHERUNG 4 E	1	2,589	**35183-0040**

* Size 2 (compact design 2/1)

Size	a_1	a_2	b	c	e_1	e_2	f	g
00	78,5	53	15	35	40	28	12,5	47
2C	150	71	20,2	48	50	50	10	65
2	150	71	26,2	48	58	58	14,5	65
3	150	72	40	60	70	70	15	65
4a	200	98	50	85	110	102	28	87

Battery switches and battery fuses
VDE 0660 T107

System
EFEN offers a complete range of single-pole compact load-break switches that are specifically designed for an operating voltage of 550 V DC as is typical for uninterruptible power supplies. These load-break switches protect batteries and battery-supplied circuits, representing the interface and isolating the system e.g. for maintenance purposes. Fuse-monitoring devices, strikers and a multitude of accessories are available.

Support
The isolation of a battery system in the event of a short-circuit must be precisely tuned to its capacity and maintenance concept. Fast-acting battery fuses selected in coordination with EFEN ensure reliable protection.

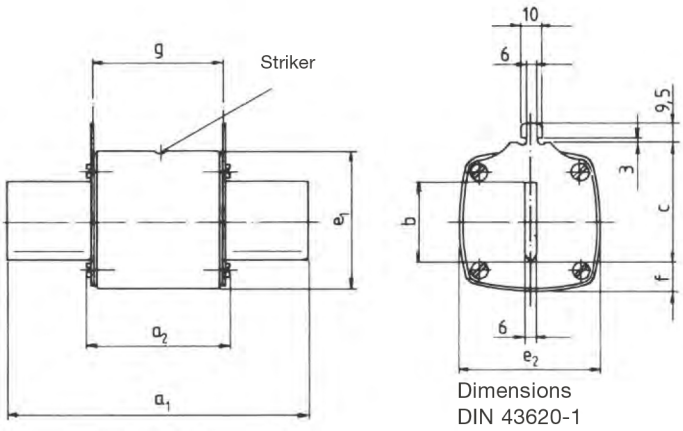

Dimensions
DIN 43620-1

ELINKS PAKISTAN

EFEN (GERMANY)

DC Fuse-Links 10 x 38

Reliable protection of photovoltaic systems against overloads and short-circuits.

System

The fuse-links 10 x 38 by EFEN are the base line of string protection in photovoltaic systems. Designed for the rated DC voltage of 600 V required for solar modules, these fuses offer reliable protection against overload and short-circuit.

Features

The compact DC fuses are designed for high breaking currents. They are ideally suited for applications requiring reliable and instant breaking in the event of a failure.

DC Fuse-Links 10 x 38

DC Fuse-Links
for 1000 V with 30 kA breaking capacity

DC Fuse-Disconnector
for optimum line section protection
see page 136

DC Fuse-Links 10 x 38

Application:
Protection of photovoltaic (PV)
DC systems against overcurrent
and short-circuits

55030-0010

DC fuse 10 x 38 for 1000 V gPV

Features:
- Rated voltage: 1000 V DC / 600 V DC
- Breaking capacity: 30 kA
- Utilization category: gPV
- IEC 60269-6

Designation	Size	Amps	PU	Product designation	Order no.
SI-10x38 gPV 1000V DC 1A	10 x 38	1	10	SI-10x38 gPV 1000V DC 1A	**55030-0010**
SI-10x38 gPV 1000V DC 2A	10 x 38	2	10	SI-10x38 gPV 1000V DC 2A	**55030-0020**
SI-10x38 gPV 1000V DC 3A	10 x 38	3	10	SI-10x38 gPV 1000V DC 3A	**55030-0030**
SI-10x38 gPV 1000V DC 4A	10 x 38	4	10	SI-10x38 gPV 1000V DC 4A	**55030-0040**
SI-10x38 gPV 1000V DC 5A	10 x 38	5	10	SI-10x38 gPV 1000V DC 5A	**55030-0050**
SI-10x38 gPV 1000V DC 6A	10 x 38	6	10	SI-10x38 gPV 1000V DC 6A	**55030-0060**
SI-10x38 gPV 1000V DC 8A	10 x 38	8	10	SI-10x38 gPV 1000V DC 8A	**55030-0080**
SI-10x38 gPV 1000V DC 10A	10 x 38	10	10	SI-10x38 gPV 1000V DC 10A	**55030-0100**
SI-10x38 gPV 1000V DC 12A	10 x 38	12	10	SI-10x38 gPV 1000V DC 12A	**55030-0120**
SI-10x38 gPV 1000V DC 15A	10 x 38	15	10	SI-10x38 gPV 1000V DC 15A	**55030-0150**
SI-10x38 gPV 1000V DC 16A	10 x 38	16	10	SI-10x38 gPV 1000V DC 16A	**55030-0160**
SI-10x38 gPV 1000V DC 20A	10 x 38	20	10	SI-10x38 gPV 1000V DC 20A	**55030-0200**
SI-10x38 gPV 600V DC 25A	10 x 38	25	10	SI-10x38 gPV 600V DC 25A	**55030-0250**
SI-10x38 gPV 600V DC 32A	10 x 38	32	10	SI-10x38 gPV 600V DC 32A	**55030-0320**

DC Fuse-Links

Protection of photovoltaic (PV) DC systems against overcurrent and short-circuits

Size	10,3 x 38 mm	
Rated voltage	1000 V DC	600 V DC
Rated current	1 to 20 A	25 to 32 A
Time constant (L/R)	2 ms	
Minimum release current	1,45 x I_n	
Breaking capacity	30 kA	
Utilization category	gPV	
Temperature	Operating temperature: - 25 °C to + 70 °C	
Without striker pin, without striker		

Rated voltage	Rated current	EAN	Weight	PU	Order no.
1000 V	1 A	4049857117321	7,9 g	10	**55030-0010**
1000 V	2 A	4049857117345	7,9 g	10	**55030-0020**
1000 V	3 A	4049857117512	7,9 g	10	**55030-0030**
1000 V	4 A	4049857117611	7,9 g	10	**55030-0040**
1000 V	5 A	4049857117635	7,9 g	10	**55030-0050**
1000 V	6 A	4049857117659	7,9 g	10	**55030-0060**
1000 V	8 A	4049857117697	7,9 g	10	**55030-0080**
1000 V	10 A	4049857117703	7,9 g	10	**55030-0100**
1000 V	12 A	4049857117710	7,9 g	10	**55030-0120**
1000 V	15 A	4049857117727	7,9 g	10	**55030-0150**
1000 V	16 A	4049857117857	7,9 g	10	**55030-0160**
1000 V	20 A	4049857117901	7,9 g	10	**55030-0200**
600 V	25 A	4049857117918	7,9 g	10	**55030-0250**
600 V	32 A	4049857117956	7,9 g	10	**55030-0320**

Temperature compensation factor (A1): Compensation factors for adjustment to ambient temperature:

Ambient temperature	25 °C	30 °C	40 °C	50 °C	60 °C	70 °C
Rated current	I_n	0,97 x I_n	0,92 x I_n	0,87 x I_n	0,82 x I_n	0,76 x I_n

Rated output

Rated current (A)	1	2	3	4	5	6	8	10	12	15	16	20	25	32
Power dissipation at 0.7 I_n (W)	0,31	0,62	0,54	0,73	0,93	0,96	1,02	1,03	1,04	1,07	1,08	1,16	1,10	1,76
Power dissipation at I_n (W)	0,76	1,54	1,35	1,84	2,22	2,4	2,55	2,58	2,6	2,44	2,7	2,9	2,74	4,4

Dimensions

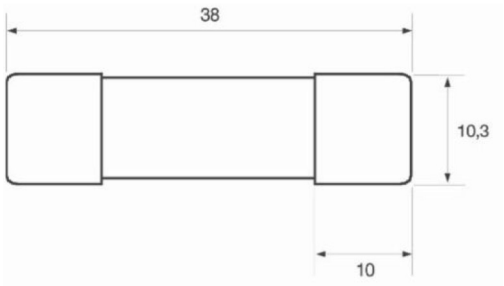

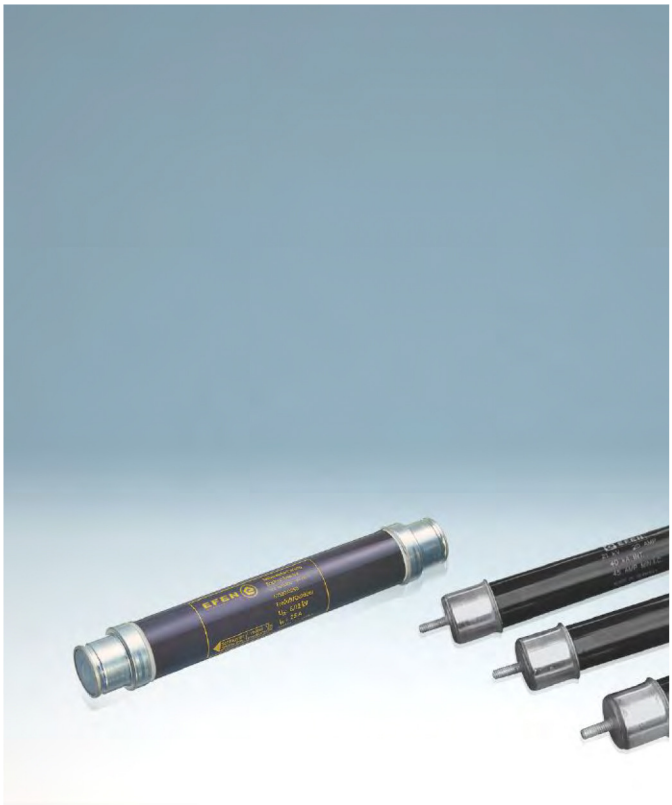

High Voltage Fuse-Links

HV Fuse-Links acc. to
VDE 0670 T402 / IEC 60 282-1

HV Fuse-Links acc. to
VDE 0670 T402 / IEC 60 282-1 ÜLA

HV Fuse-Links acc. to
VDE 0670 T402 / IEC 60 282-1 ÜLA+

HV Fuse-Links acc. to
VDE 0670 T4 / IEC 60 282-1

HV Fuse-Links acc. to
VDE 0670 T4 / IEC 60 282-1 ÜLA

EFEN HV general purpose Fuse-Links
acc. to VDE 0670 T402 / IEC 60 282-1

High-Voltage Fuse-Links for
Voltage Transformers (HSW) acc. to
VDE 0670 T 402 / IEC 60282-1

Test device for tripping medium
voltage switches

Accessories for HV Fuse-Links

Back-Up Fuse-Links
with controlled power dissipation (ÜLA)

Test device
for tripping medium voltage switches

Special Version
with threaded stud

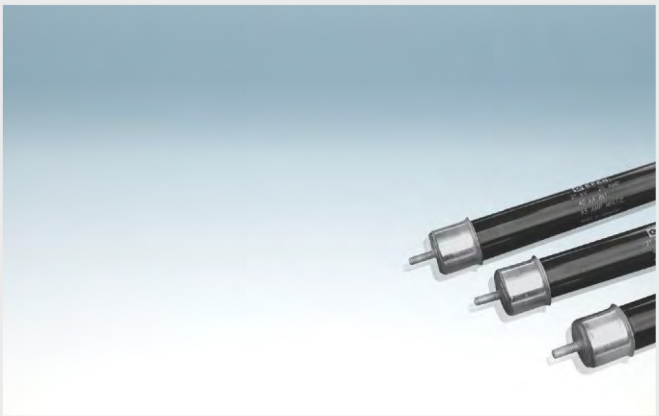

High-Voltage Fuse-Link
for voltage transformers (HSW)

HV Fuse-Links acc. to VDE 0670 T4 / IEC 60 282-1

67220-0400

HV back-up Fuse-Links acc. to VDE 0670 T4 / IEC 60 282-1

Designation	Rated volt. kV	Length	Ø	Amps	PU	Product designation	Order no.
HH-SI 3/7,2KV 2A FC TB 192/56	3/7,2	192	56	2	1	HH-SI 3/7,2KV 2A FC TB 192/56	**67210-0020**
HH-SI 3/7,2KV 4A FC TB 192/56	3/7,2	192	56	4	1	HH-SI 3/7,2KV 4A FC TB 192/56	**67210-0040**
HH-SI 3/7,2KV 63A FC TB 192/65	3/7,2	192	65	63	1	HH-SI 3/7,2KV 63A FC TB 192/65	**67210-0630**
HH-SI 3/7,2KV 80A FC TB 192/65	3/7,2	192	65	80	1	HH-SI 3/7,2KV 80A FC TB 192/65	**67210-0800**
HH-SI 3/7,2KV 100A FC TB 192/65	3/7,2	192	65	100	1	HH-SI 3/7,2KV 100A FC TB 192/65	**67210-1000**
HH-SI 3/7,2KV 160A FC TB 192/88	3/7,2	192	88	160	1	HH-SI 3/7,2KV 160A FC TB 192/88	**67210-1600**
HH-SI 3/7,2KV 200A FC TB 192/88	3/7,2	192	88	200	1	HH-SI 3/7,2KV 200A FC TB 192/88	**67210-2000**
HH-SI 6/12KV 1A FC TB 292/56	6/12	292	56	1	1	HH-SI 6/12KV 1A FC TB 292/56	**67220-0010**
HH-SI 6/12KV 2A FC TB 292/56	6/12	292	56	2	1	HH-SI 6/12KV 2A FC TB 292/56	**67220-0020**
HH-SI 6/12KV 4A FC TB 292/56	6/12	292	56	4	1	HH-SI 6/12KV 4A FC TB 292/56	**67220-0040**
HH-SI 6/12KV 6,3A FC TB 292/56	6/12	292	56	6,3	1	HH-SI 6/12KV 6,3A FC TB 292/56	**67220-0060**
HH-SI 6/12KV 10A FC TB 292/56	6/12	292	56	10	1	HH-SI 6/12KV 10A FC TB 292/56	**67220-0100**
HH-SI 6/12KV 16A FC TB 292/56	6/12	292	56	16	1	HH-SI 6/12KV 16A FC TB 292/56	**67220-0160**
HH-SI 6/12KV 20A FC TB 292/56	6/12	292	56	20	1	HH-SI 6/12KV 20A FC TB 292/56	**67220-0200**
HH-SI 6/12KV 25A FC TB 292/56	6/12	292	56	25	1	HH-SI 6/12KV 25A FC TB 292/56	**67220-0250**
HH-SI 6/12KV 31,5A FC TB 292/56	6/12	292	56	31,5	1	HH-SI 6/12KV 31,5A FC TB 292/56	**67220-0320**
HH-SI 6/12KV 40A FC TB 292/56	6/12	292	56	40	1	HH-SI 6/12KV 40A FC TB 292/56	**67220-0400**
HH-SI 6/12KV 50A FC TB 292/56	6/12	292	56	50	1	HH-SI 6/12KV 50A FC TB 292/56	**67220-0500**
HH-SI 6/12KV 63A FC TB 292/56	6/12	292	56	63	1	HH-SI 6/12KV 63A FC TB 292/56	**67220-0630**
HH-SI 6/12KV 80A FC TB 292/65	6/12	292	65	80	1	HH-SI 6/12KV 80A FC TB 292/65	**67220-0800**
HH-SI 6/12KV 100A FC TB 292/65	6/12	292	65	100	1	HH-SI 6/12KV 100A FC TB 292/65	**67220-1000**
HH-SI 6/12KV 125A FC TB 292/88	6/12	292	88	125	1	HH-SI 6/12KV 125A FC TB 292/88	**67220-1250**
HH-SI 6/12KV 160A FC TB 292/88	6/12	292	88	160	1	HH-SI 6/12KV 160A FC TB 292/88	**67220-1600**
HH-SI 6/12KV 200A FC TB 292/88	6/12	292	88	200	1	HH-SI 6/12KV 200A FC TB 292/88	**67220-2000**
HH-SI 6/12KV 250A FC TB 292/88	6/12	292	88	250	1	HH-SI 6/12KV 250A FC TB 292/88	**67220-2500**
HH-SI 10/17,5KV 2A FC TB 367/56	10/17,5	367	56	2	1	HH-SI 10/17,5KV 2A FC TB 367/56	**67230-0020**
HH-SI 10/17,5KV 4A FC TB 367/56	10/17,5	367	56	4	1	HH-SI 10/17,5KV 4A FC TB 367/56	**67230-0040**
HH-SI 10/17,5KV 50A FC TB 367/65	10/17,5	367	65	50	1	HH-SI 10/17,5KV 50A FC TB 367/65	**67230-0500**
HH-SI 10/17,5KV 63A FC TB 367/65	10/17,5	367	65	63	1	HH-SI 10/17,5KV 63A FC TB 367/65	**67230-0630**
HH-SI 10/17,5KV 80A FC TB 367/65	10/17,5	367	65	80	1	HH-SI 10/17,5KV 80A FC TB 367/65	**67230-0800**
HH-SI 10/17,5KV 100A FC TB 367/65	10/17,5	367	65	100	1	HH-SI 10/17,5KV 100A FC TB 367/65	**67230-1000**
HH-SI 10/24KV 1A FC TB 442/56	10/24	442	56	1	1	HH-SI 10/24KV 1A FC TB 442/56	**67240-0010**
HH-SI 10/24KV 2A FC TB 442/56	10/24	442	56	2	1	HH-SI 10/24KV 2A FC TB 442/56	**67240-0020**
HH-SI 10/24KV 4A FC TB 442/56	10/24	442	56	4	1	HH-SI 10/24KV 4A FC TB 442/56	**67240-0040**
HH-SI 10/24KV 6,3A FC TB 442/56	10/24	442	56	6,3	1	HH-SI 10/24KV 6,3A FC TB 442/56	**67240-0060**
HH-SI 10/24KV 10A FC TB 442/56	10/24	442	56	10	1	HH-SI 10/24KV 10A FC TB 442/56	**67240-0100**
HH-SI 10/24KV 16A FC TB 442/56	10/24	442	56	16	1	HH-SI 10/24KV 16A FC TB 442/56	**67240-0160**
HH-SI 10/24KV 20A FC TB 442/56	10/24	442	56	20	1	HH-SI 10/24KV 20A FC TB 442/56	**67240-0200**
HH-SI 10/24KV 25A FC TB 442/56	10/24	442	56	25	1	HH-SI 10/24KV 25A FC TB 442/56	**67240-0250**
HH-SI 10/24KV 31,5A FC TB 442/56	10/24	442	56	31,5	1	HH-SI 10/24KV 31,5A FC TB 442/56	**67240-0320**
HH-SI 10/24KV 40A FC TB 442/56	10/24	442	56	40	1	HH-SI 10/24KV 40A FC TB 442/56	**67240-0400**
HH-SI 10/24KV 50A FC TB 442/56	10/24	442	56	50	1	HH-SI 10/24KV 50A FC TB 442/56	**67240-0500**
HH-SI 10/24KV 63A FC TB 442/65	10/24	442	65	63	1	HH-SI 10/24KV 63A FC TB 442/65	**67240-0630**
HH-SI 10/24KV 80A FC TB 442/65	10/24	442	65	80	1	HH-SI 10/24KV 80A FC TB 442/65	**67240-0800**
HH-SI 10/24KV 100A FC TB 442/78	10/24	442	78	100	1	HH-SI 10/24KV 100A FC TB 442/78	**67240-1000**
HH-SI 10/24KV 125A FC TB 442/88	10/24	442	88	125	1	HH-SI 10/24KV 125A FC TB 442/88	**67240-1250**
HH-SI 10/24KV 160A FC TB 442/88	10/24	442	88	160	1	HH-SI 10/24KV 160A FC TB 442/88	**67240-1600**
HH-SI 20/36KV 2A FC TB 537/56	20/36	537	56	2	1	HH-SI 20/36KV 2A FC TB 537/56	**67250-0020**
HH-SI 20/36KV 4A FC TB 537/56	20/36	537	56	4	1	HH-SI 20/36KV 4A FC TB 537/56	**67250-0040**
HH-SI 20/36KV 6,3A FC TA 537/56	20/36	537	56	6,3	1	HH-SI 20/36KV 6,3A FC TA 537/56	**67150-0060**
HH-SI 20/36KV 10A FC TA 537/56	20/36	537	56	10	1	HH-SI 20/36KV 10A FC TA 537/56	**67150-0100**
HH-SI 20/36KV 16A FC TA 537/56	20/36	537	56	16	1	HH-SI 20/36KV 16A FC TA 537/56	**67150-0160**
HH-SI 20/36KV 20A FC TA 537/56	20/36	537	56	20	1	HH-SI 20/36KV 20A FC TA 537/56	**67150-0200**
HH-SI 20/36KV 25A FC TA 537/56	20/36	537	56	25	1	HH-SI 20/36KV 25A FC TA 537/56	**67150-0250**
HH-SI 20/36KV 31,5A FC TA 537/65	20/36	537	65	31,5	1	HH-SI 20/36KV 31,5A FC TA 537/65	**67150-0320**
HH-SI 20/36KV 40A FC TA 537/65	20/36	537	65	40	1	HH-SI 20/36KV 40A FC TA 537/65	**67150-0400**
HH-SI 20/36KV 50A FC TA 537/88	20/36	537	88	50	1	HH-SI 20/36KV 50A FC TA 537/88	**67150-0500**
HH-SI 20/36KV 63A FC TA 537/88	20/36	537	88	63	1	HH-SI 20/36KV 63A FC TA 537/88	**67150-0630**

HV Fuse-Links
General remarks

General information
HV fuse-links have been ensuring reliable protection in medium-voltage substations and grids for decades. They protect systems and equipment against the thermal and dynamic effects of short-circuits.
EFEN HV fuse-links provide the following significant features:
- High breaking capacity
- High current limitation
- Low switching voltage
- Quick breaking
- Non-ageing

EFEN HV fuse-links comply with the following standards:
- VDE 0670 T4 / IEC 60 282-1: High-voltage “current-limiting fuses”
- VDE 0670 T402: Selection of current-limiting fuses for transformer circuits
- IEC 60 787: Application guide for the selection of fuse-links of high-voltage fuses for transformer circuit applications
- VDE 0671 T105 / IEC 62271-105: High-voltage switch-fuse combinations
- DIN 43 625: High-voltage fuses, rated voltages 3.6 to 36 kV (fuse-link dimensions)
- DIN 43 624: High-voltage fuses, rated voltages 3/3.6 to 30/36 kV (single-pole fuse bases)

The quality management system of EFEN GmbH is certified to the international standard DIN ISO 9001 (EN 29001).
EFEN applies a certified environment management system acc. to DIN ISO 14001 and the Eco Audit Order of the Council (EEC) 1836/93.
EFEN manufactures HV fuse-links dimensioned acc. to DIN 43 625 with strikers for indoor and outdoor use. Due to its red color, the striker can be used as a trip-free mechanism and also as an indicator.
In addition to the HV fuse-links shown in this catalogue, EFEN also manufactures a wide range of special-purpose fuse-links in other or custom dimensions. If you have a particular application that requires a special fuse protection solution, simply ask the EFEN team, we are there for you!

Terms and definitions
According to the applicable standards and physical properties, distinction is made between back-up fuse-links and general-purpose fuse-links:

Back-up Fuse-Links
Back-up fuse-links have a “rated minimum breaking current” from which the fuse-links are able to interrupt current. Back-up fuse-links cannot interrupt current when operated below their “rated minimum breaking current” (below I_3). They operate from I_3 to the “rated maximum breaking current” (I_1).
When assigning back-up fuse-links, it must be considered that the lowest short-circuit current at the point of installation of the HV back-up fuse-link is higher than I_3 ($I_{Kmin} > I_3$). If the short-circuit current is possibly lower than the minimum breaking current, additional protection must be provided.

General-purpose Fuse-Links
EFEN‘s general-purpose fuse-links comply with the correspondingly defined standards. Their operating range is extended for lower currents. These fuse-links are capable of interrupting all currents from any current causing the fuse-link to melt within a period of at least 1 hour and up to the “maximum rated breaking current” (I_1). This allows these fuse-links to interrupt low fault currents reliably.

Striker
The strikers of the HV fuse-links of this product list have an effective length of 30 mm and are of type “medium”. This classification results from the energy released by the striker between the points A and B (Fig.1). The initial force is approx. 80 N, the force at the end of the free motion is approx. 15 N. The striker is provided to serve as trip-free mechanism of the load-break switches.

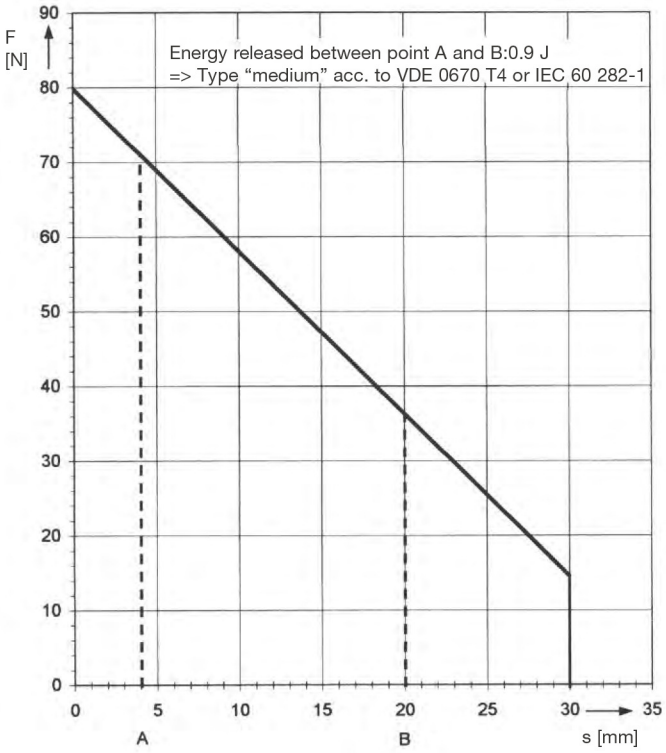

Fig.1

HV Fuse-Links
General remarks

Protection of transformers
The following must be observed when selecting HV fuse-links:
a) Transformer ratings
- Rated operating voltage (U)
- Rated output (S)
- rel. short-circuit voltage (u_k %)
- Inrush current (8... 12 I_N)

b) Time-current characteristics of HV fuse-links
c) Secondary protective devices/selectivity

Procedure explained using an example:
A 630 kVA transformer has a transformer rated current of 18.2 A at a rated operating voltage of 20 kV. The relative short-circuit voltage is 4%, and the inrush current is 12 x I_N. The short-circuit current on the secondary terminal short-circuit results from the relative short-circuit voltage. The transformer must be designed to withstand this current for 2 seconds. This condition results in point b) in Fig. 3. HV fuse-links must break this current within 2 seconds. In Fig. 3, fuse-link F4 must not be used for this transformer, as the fuse-link will require more than 2 seconds to melt at the given short-circuit current.

The inrush current is plotted for a duration of 0.1 seconds, resulting in point a). This inrush current must not melt the fuse-link. Accordingly, fuse-link F1 cannot be used for this transformer. Fuse-links F2 and F3 may be used for this transformer since their time-current characteristics are between points a) and b). Several HV fuse-links for various rated currents can therefore be assigned to a transformer. The selection of the correct fuse must be based on the time-current characteristic and not the rated current of the HV fuse-link.
German standard VDE 0670 T402 defines time-current ranges for rated currents, taking into account points a) and b) as well as the selectivity to the NH fuse-links of utilization category gTr. If an HV fuse-link is assigned to a transformer according to part 402, all of the above factors must be taken into account to select the correct HV fuse-link.

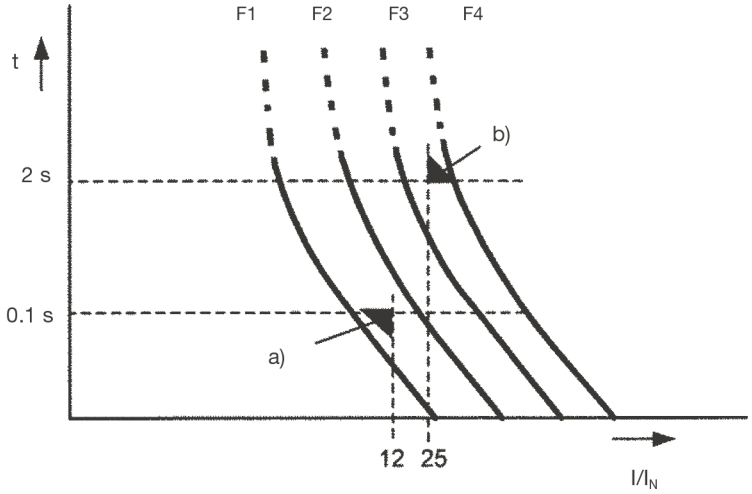

Fig. 3

F1– F4) Time-current characteristics for HV fuse-links
a) Inrush current
b) Lowest short-circuit current of the transformer

HV Fuse-Links
Selection table for HV back-up Fuse-Links

VDE 0670 T402 with ÜLA Plus / selection table acc. to IEC 62271-105

		Transformer rated output in kVA															
Rated voltage range of the fuse-link (kV)		$U_K = 4\ \%$									$U_K = 6\ \%$						
Rated operating voltage of the transformer		100	125	160	200	250	315	400	500	630	630	800	1000	1250	1600	2000	2500
6/12 / 10	Transformer rated current in A	5,8	7,2	9,2	11,5	14,4	18,2	23,1	28,9	36,4	36,4	46,2	57,7	72,2	92,4		
	Short-circuit current 2s in A	144	180	231	289	361	455	577	722	909	606	770	962	1203	1540		
	Transfer current I transfer in A T0 = 40 ms	143	143	184	258	321	433	567	512	660	512	660	837	1135	1320		
	Rated current of the fuse-link in A	16	16	20	25	31,5	40	50	63	80	63	80	100	125	160		
	Power dissipation of the fuse-link IN transf. in W	1,9	3,0	3,4	4,7	5,3	6,9	8,3	8,1	11,3	14,0	19,8	24,1	26,3	42,2		
10/24 / 20	Transformer rated current in A	2,9	3,6	4,6	5,8	7,2	9,1	11,5	14,4	18,2	18,2	23,1	28,9	36,1	46,2	57,7	72,2
	Short-circuit current 2s in A	72	90	115	144	180	227	289	361	455	303	385	481	601	770	962	1203
	Transfer current I transfer in A	72	72	72	136	173	239	239	310	436	307	436	450	562	701	860	1184
	Rated current of the fuse-link in A	10	10	10	16	20	25	25	31,5	40	31,5	40	50	63	80	100	125
	Power dissipation of the fuse-link IN transf. in W	2,6	4,0	6,7	4,0	4,8	5,8	9,7	11,8	13,2	20,2	23,1	23,6	24,1	36,9	48,2	61,2
20/36 / 30	Transformer rated current in A	1,9	2,4	3,1	3,8	4,8	6,1	7,7	9,6	12,1	12,1	15,4	19,2	24,1	30,8	38,5	48,1
	Short-circuit current 2s in A	48	60	77	96	120	152	192	241	303	202	257	321	401	513	642	802
	Transfer current I transfer in A T0 = 40 ms	39	39	71	71	71	139	181	181	228	181	228	315	400	450	577	731
	Rated current of the fuse-link in A	6,3	6,3	10	10	10	16	20	20	25	20	25	31,5	40	50	63	80
	Power dissipation of the fuse-link IN transf. in W	2,4	3,7	4,1	6,3	6,1	3,6	6,3	13,1	15,9	22,8	28,3	33,0	46,9	51,7	45,7	61,0

HV Fuse-Links

HV back-up Fuse-Links acc. to VDE 0670 T4 / IEC 60 282-1

Electrical data, dimensions, weight

Rated voltage range	Rated current	Rated value Maximum breaking current	Rated value Minimum breaking current	Dimensions		Resistance and power dissipation		Operating integral	Weight	PU	Order no.
U_N kV	I_N A	I_1 kA	I_3 A	e mm	d mm	$R_{initial}$ mΩ	P_{warm} * W	A2s	kg		
3/7,2	2	63	15	192	56	290	1,8	600	1,1	1	**67210-0020**
3/7,2	4	63	20	192	56	270	5	800	1,1	1	**67210-0040**
3/7,2	6,3	63	21	192	56	256	11	800	1,1	1	**67110-0060**
3/7,2	10	63	38	192	56	144	19	3.000	1,1	1	**67110-0100**
3/7,2	16	63	65	192	56	41	13	2.340	1,1	1	**67110-0160**
3/7,2	20	63	92	192	56	32	14,5	3.900	1,1	1	**67110-0200**
3/7,2	25	63	110	192	56	25	20	4.900	1,1	1	**67110-0250**
3/7,2	31,5	63	123	192	56	19	23	7.000	1,1	1	**67110-0320**
3/7,2	40	63	140	192	56	12,3	30	14.000	1,1	1	**67110-0400**
3/7,2	50	63	194	192	56	9,3	35	25.300	1,1	1	**67110-0500**
3/7,2	63	63	220	192	65	8,75	60	41.200	1,4	1	**67210-0630**
3/7,2	80	63	306	192	65	6,3	85	84.000	1,4	1	**67210-0800**
3/7,2	100	63	363	192	65	5	96	93.600	1,4	1	**67210-1000**
3/7,2	125	63	440	192	88	2,9	75	440.000	2,4	1	**67110-1250**
3/7,2	160	63	509	192	88	2,5	120	500.000	2,4	1	**67210-1600**
3/7,2	200	63	612	192	88	2,3	200	654.000	2,4	1	**67210-2000**
6/12	1	63	14	292	56	1500	1,6	90	1,6	1	**67220-0010**
6/12	2	63	16	292	56	510	2	280	1,6	1	**67220-0020**
6/12	4	63	22	292	56	338	6	500	1,6	1	**67220-0040**
6/12	6,3	63	30	292	56	190	8	600	1,6	1	**67220-0060**
6/12	10	63	42	292	56	139	16	1.150	1,6	1	**67220-0100**
6/12	16	63	54	292	56	107	38	1.290	1,6	1	**67220-0160**
6/12	20	63	73	292	56	71	38	3.200	1,6	1	**67220-0200**
6/12	25	63	93	292	56	52	46	5.200	1,6	1	**67220-0250**
6/12	31,5	63	105	292	56	43	65	7.200	1,6	1	**67220-0320**
6/12	40	63	125	292	56	23	54	23.300	1,6	1	**67220-0400**
6/12	50	63	160	292	56	18	70	34.900	1,6	1	**67220-0500**
6/12	63	63	230	292	56	12	85	58.300	1,6	1	**67220-0630**
6/12	80	63	350	292	65	10,6	114	90.000	2,1	1	**67220-0800**
6/12	100	63	500	292	65	8,5	156	140.000	2,1	1	**67220-1000**
6/12	125	63	480	292	88	4	117	440.000	3,7	1	**67220-1250**
6/12	160	63	560	292	88	4,3	217	500.000	3,7	1	**67220-1600**
6/12	200	63	610	292	88	3,8	333	654.000	3,7	1	**67220-2000**
6/12	250	63	740	292	88	-	-	-	-	1	**67220-2500**
10/17,5	2	63	15	367	56	610	4	600	1,9	1	**67230-0020**
10/17,5	4	63	20	367	56	580	15	800	1,9	1	**67230-0040**
10/17,5	50	63	165	367	65	28	117	20.600	2,6	1	**67230-0500**
10/17,5	63	63	220	367	65	21	150	41.200	2,6	1	**67230-0630**
10/17,5	80	63	300	367	65	15	183	84.000	2,6	1	**67230-0800**
10/17,5	100	63	350	367	65	13	260	93.600	2,6	1	**67230-1000**
10/24	1	63	14	442	56	2100	2	90	2,3	1	**67240-0010**
10/24	2	63	16	442	56	800	3	340	2,3	1	**67240-0020**
10/24	4	63	23	442	56	550	10	450	2,3	1	**67240-0040**
10/24	6,3	63	30	442	56	300	13	530	2,3	1	**67240-0060**
10/24	10	63	43	442	56	220	26	940	2,3	1	**67240-0100**
10/24	16	63	54	442	56	197	73	1.400	2,3	1	**67240-0160**
10/24	20	63	73	442	56	134	76	3.100	2,3	1	**67240-0200**
10/24	25	63	93	442	56	96	89	4.500	2,3	1	**67240-0250**
10/24	31,5	63	105	442	56	79	127	5.900	2,3	1	**67240-0320**
10/24	40	63	125	442	56	45	114	18.800	2,3	1	**67240-0400**
10/24	50	63	205	442	56	35	147	33.500	2,3	1	**67240-0500**
10/24	63	63	350	442	65	29	163	46.400	3,1	1	**67240-0630**
10/24	80	63	310	442	65	20,5	233	84.000	3,1	1	**67240-0800**
10/24	100	63	430	442	78	18	400	93.600	4,1	1	**67240-1000**
10/24	125	40	760	442	88	11	340	350.000	5,9	1	**67240-1250**
10/24	160	31,5	900	442	88	9,6	515	500.000	5,9	1	**67240-1600**
10/24	200	31,5	1050	442	88	7,4	740	730.000	5,9	1	**67240-2000**

HV Fuse-Links

Rated voltage range	Rated current	Rated value Maximum breaking current	Rated value Minimum breaking current	Dimensions		Resistance and power dissipation		Operating integral	Weight	PU	Order no.
U_N kV	I_N A	I_1 kA	I_3 A	e mm	d mm	$R_{initial}$ mΩ	P_{warm} * W	A2s	kg		
20/36	2	31,5	15	537	56	950	9	600	2,7	1	**67250-0020**
20/36	4	31,5	20	537	56	900	32	800	2,7	1	**67250-0040**
20/36	6,3	31,5	23	537	56	827	39	600	2,7	1	**67150-0060**
20/36	10	31,5	34	537	56	520	65	2.000	2,7	1	**67150-0100**
20/36	16	31,5	70	537	56	210	67	2.340	2,7	1	**67150-0160**
20/36	20	31,5	100	537	56	165	84	3.900	2,7	1	**67150-0200**
20/36	25	31,5	110	537	56	125	100	6.500	2,7	1	**67150-0250**
20/36	31,5	31,5	135	537	65	85	119	7.000	3,7	1	**67150-0320**
20/36	40	20	205	537	65	65	176	14.200	3,7	1	**67150-0400**
20/36	50	20	220	537	88	45	183	40.000	6,5	1	**67150-0500**
20/36	63	20	360	537	88	35	271	61.700	6,5	1	**67150-0630**

HV back-up Fuse-Links acc. to VDE 0670 T4 and T4 ÜLA
Time-current characteristics

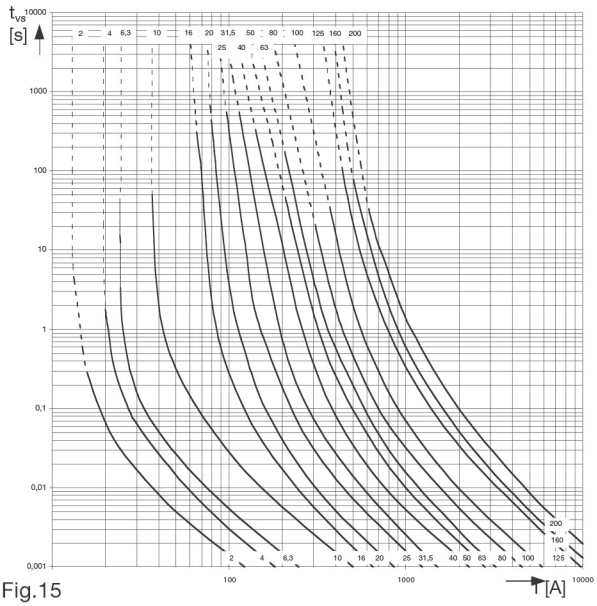

Fig.15
3/7.2 kV

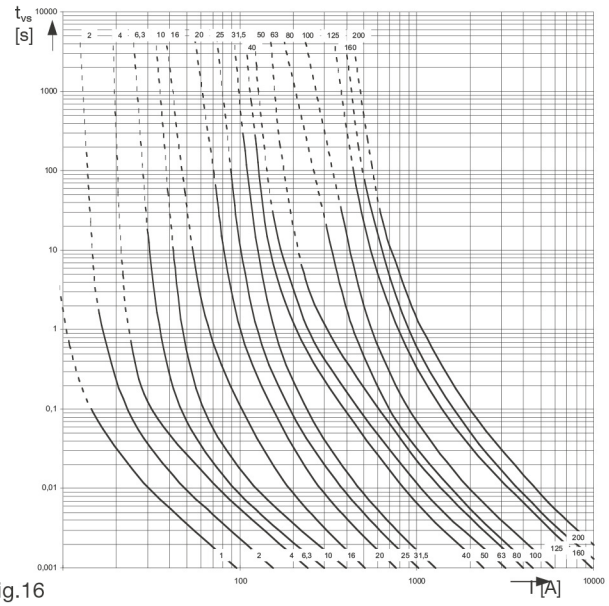

Fig.16
6/12 kV

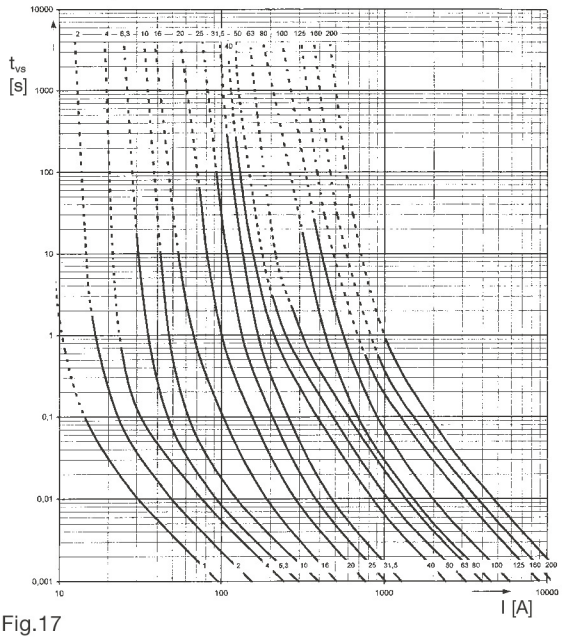

Fig.17
10/24 kV

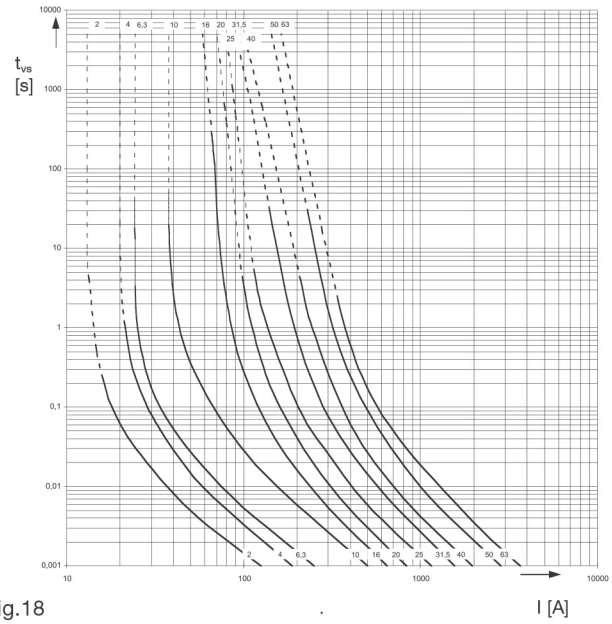

Fig.18
20/36 kV

Visit Our Website!

www.elinkspakistan.com

Lahore Office: 1st and 3rd Floor, Khursheed Manzil, Carpet Chamber, 10 Abbot Road, Lahore, Pakistan

Phone: +92-42-36361669, 36310561

Mobile: +92-300-8454165, +92-333-4554454

Email: mansoor@elinkspakistan.com
muzamil@elinkspakistan.com
mktelp@gmail.com