ELINKS PAKISTAN

ZEZ SILKO
Get energized with us

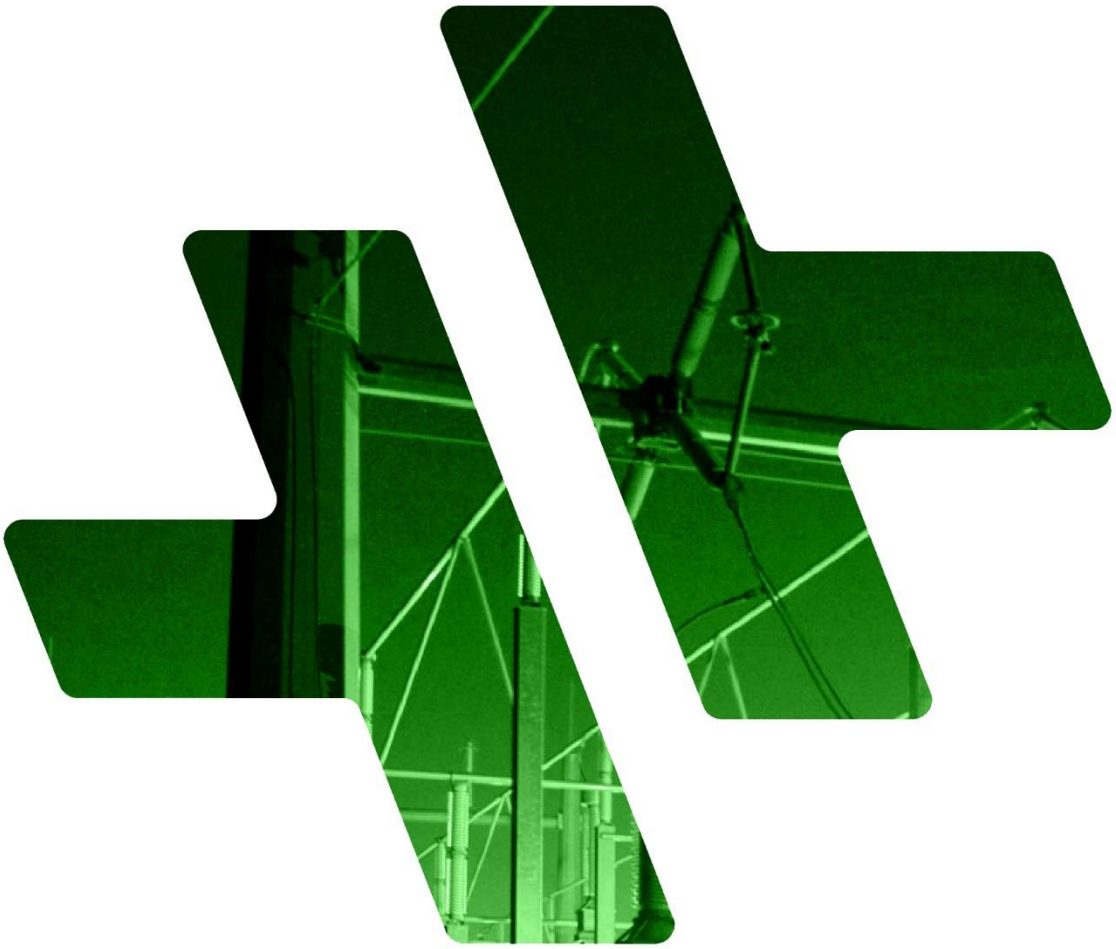

POWER FACTOR CORRECTION

ABOUT ZEZ SILKO:

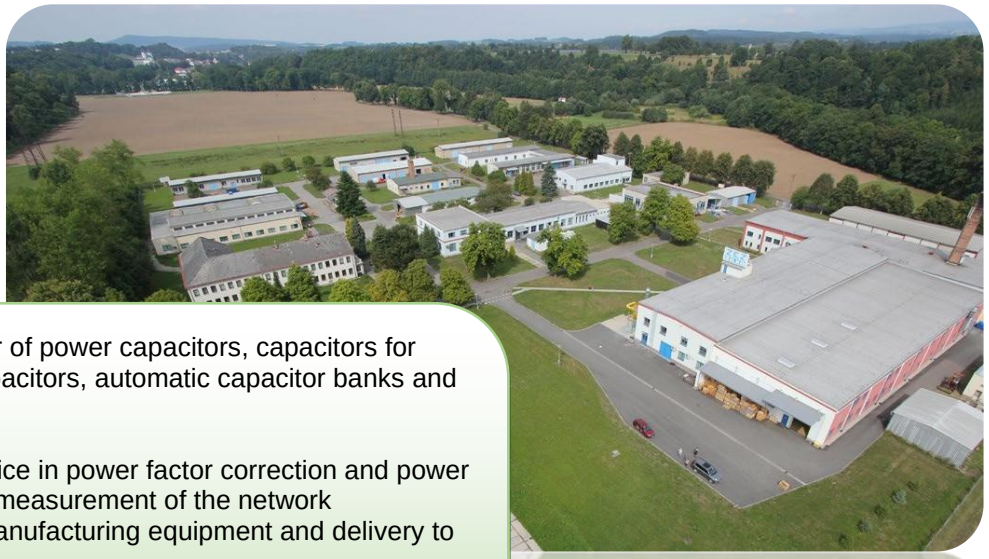

ZEZ SILKO Ltd. is a significant producer of power capacitors, capacitors for power electronics, induction heating capacitors, automatic capacitor banks and other products in the Czech Republic.

ZEZ SILKO Ltd. provides complete service in power factor correction and power system evaluation included harmonics (measurement of the network parameters, preparing specifications, manufacturing equipment and delivery to customers).

Tradition of this production in the Czech Republic dates back to 1930. Nowadays the firm has up-to-date production technology and quality control system according to standards ISO 9001. Ecology and environmental policy are of a great concern for ZEZ SILKO.

APPLICATIONS:

- **RAILWAYS AND PUBLIC TRANSPORT**

- DC link cylindrical
- DC link rectangular
- AC filter
- Snubber

• ELECTROMOBILITY

- DC link rectangular

• SOLAR ENERGY

- DC link rectangular
- AC filter

• FOUNDRIES

- Water cooled capacitors
- Air cooled capacitors
- COAX type capacitors
- DC link cylindrical
- Snubber

• POWER INDUSTRIES

- PFC LV
- PFC MV
- Switchboards
- Measurement and Control

• WIND ENERGY

- DC link rectangular
- AC filter

• LABORATORIES

- Impulse capacitors
- Snubber

Power Capacitors

Power capacitors are intended for individual, group or central power factor correction. To compensate inductive reactive power of industrial appliances such as electric motors, welding equipments, etc. This inductive power is undesirable for the grid provider and shall be avoided with power factor compensation.

Max. Permissible Voltage

RMS Overvoltage	Max. Period
1.10 × U_N	8 hours / day
1.15 × U_N	30 min / day
1.20 × U_N	5 min (200×)
1.30 × U_N	1 min (200×)

Temperature Categories

	Ambient Temperature		
Temperature Category	**Max.**	**24 hours***	**1 year***
C	$50°C$	$40°C$	$30°C$
D	$55°C$	$45°C$	$35°C$
D($60°C$)	$60°C$	$45°C$	$35°C$

* Max. mean value during period

ELINKS PAKISTAN

LV Power Capacitors

HD - Heavy Duty

Three phase power capacitors, self-healing, dry - gas filled

Features

$I_{max} = 2 \times I_N$
Lifetime Expectancy: > 150 000 h
Temperature Class: -40/D (60°C)
Dry type: gas filling
For general use in high level applications.
THD-U $\leq$ 3%

HD - Heavy Duty

General Technical Parameters

Standard	IEC EN 60831-1/2, VDE 0560-46/47, GOST 1282-88
Rated Voltage	230 - 800 V / 50 Hz
Rated Power	1 - 50 kvar
Capacitance Tolerance	-5 / +10 %
Max. Permissible Current	1,5 x I_N Continuous, 2 x I_N Short period*
Max. Inrush Current	400 x I_N
Capacitor Losses	cca 0,4 W / kvar
Discharge Resistors	built-in 75 V / 3 min (50 V / 1 min up to 30 kvar)
Statistical Life Expectancy	> 150 000 hours according to operating conditions
Protection Degree	IP 20 (IP 54 selected types on request)
Max. Relative Humidity	95 %
Cooling	Natural Air or Forced
Max. Altitude	4000 m
Mounting Position	Any position
Case	Aluminum can
Dielectric System	Dry metallized polypropylene
Impregnant / Filling	Inert gas N_2 or semi-dry resin (50 kvar)
Safety Device	3 fuses overpressure disconnector
Terminals	One side - 3 clamps

Note: * Maximum current for 48 hours continuous operation with relation to highest mean ambient temperature of 45°C over period of 24 h

Overpressure disconnector function

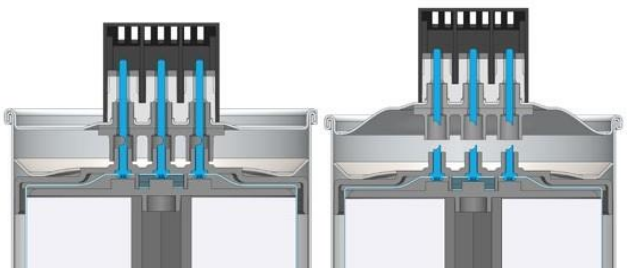

ELINKS PAKISTAN

400/415 V / 50 Hz

Q_C (kvar)	Type	C_N (Δ) (μ F)	I(A)	D x H (mm)	m (kg)	Terminal
5	CSADG- 0,4 /5 - HD	3 x 33,2	7,2	85 x 175	0,9	A
6,25	CSADG- 0,4 /6,25 - HD	3 x 41, 4	9,0	85 x 175	1,0	A
7,5	CSADG- 0,4 / 7, 5 - HD	3 x 49,7	10,8	85 x 175	1,0	A
10	CSADG- 0,4 /10 - HD	3 x 66,3	14,4	85 x 245	1,2	A
12,5	CSADG- 0,4 /12,5 - HD	3 x 82,9	18,0	85 x 245	1,4	A
15	CSADG- 0,4 /15 - HD	3 x 99,5	21,7	85 x 245	1,5	A
20	CSADG- 0,4 / 20 - HD	3 x 133	28,9	100 x 245	1,9	A
25	CSADG- 0,4 / 25 - HD	3 x 166	36,1	116 x 245	2,2	B
30	CSADG- 0,4 / 30 - HD	3 x 199	43,3	116 x 245	2,5	B
40	CSADG- 0,4 /40 - HD	3 x 265	57,8	136 x 261	3,8	C
50	CSADG- 0,4 /50 - HD	3 x 332	72,2	136 x 355	5,2	C

440 V / 50 Hz

Q_C (kvar)	Type	C_N (Δ) (μF)	I_N (A)	Ø D x H (mm)	m (kg)	Terminal
2,5	CSADG- 0,44/2,5 - HD	3 x 13,7	3, 3	85 x 175	0,6	A
5	CSADG- 0,44/5 - HD	3 x 27,4	6,6	85 x 175	0,7	A
6,25	CSADG- 0,44/6, 25 - HD	3 x 34, 3	8,2	85 x 175	0,8	A
7,5	CSADG- 0,44/ 7,5 - HD	3 x 41,1	9,9	85 x 175	0,9	A
10	CSADG- 0,44/10 - HD	3 x 54,8	13,1	85 x 245	1,1	A
12,5	CSADG- 0,44/12,5 - HD	3 x 68,5	16,4	85 x 245	1, 2	A
15	CSADG- 0,44/15 - HD	3 x 82, 2	19,7	85 x 245	1,4	A
20	CSADG- 0,44/20 - HD	3 x 110	26, 2	100 x 245	1,8	A
25	CSADG- 0,44/25 - HD	3 x 137	32,8	100 x 245	1,9	A
28,1	CSADG- 0,44/28,1- HD	3 x 154	36,8	116 x 245	2,1	B
30	CSADG- 0,44/30 - HD	3 x 164	39,4	116 x 245	2,2	B
33,3	CSADG- 0,44/33, 3- HD	3 x 183	43,7	136 x 261	3,8	B
37,5	CSADG- 0,44/37,5 - HD	3 x 206	49,2	136 x 261	3,9	B
40	CSADG- 0,44/40 - HD	3 x 219	52,5	136 x 261	4,0	B
50	CSADG- 0,44/50 - HD	3 x 274	65,6	136 x 355	5,0	C

480 V / 50 Hz

Q_C (kvar)	Type	C_N (Δ) (μ F)	I_N (A)	Ø D x H (mm)	m (kg)	Terminal
10	CSADG- 0,48/10 - HD	3 x 46,0	12,0	85 x 245	1,1	A
12,5	CSADG- 0,48/12,5 - HD	3 x 57,6	15,0	85 x 245	1,3	A
15	CSADG- 0,48/15 - HD	3 x 69,1	18,0	85 x 245	1,5	A
20	CSADG- 0,48/ 20 - HD	3 x 92,1	24,1	100 x 245	2,2	A
25	CSADG- 0,48/ 25 - HD	3 x 115	30,1	116 x 245	2,4	B
30	CSADG- 0,48/ 30 - HD	3 x 138	36,1	116 x 245	2,6	B
33,3	CSADG- 0,48/33,3 - HD	3 x 153	40,1	136 x 220	2,9	B
36	CSADG- 0,48/36 - HD	3 x 166	43,5	136 x 261	3,1	B
40	CSADG- 0,48/40 - HD	3 x 184	48,1	136 x 261	3,3	B

525 V / 50 Hz

Q_C (kvar)	Type	C_N (Δ) (μ F)	I(A)	Ø D x H (mm)	m (kg)	Terminal
5	CSADG- 0,525/5 - HD	3 x 19,2	5 ,5	85 x 175	0,8	A
10	CSADG- 0,525/10 - HD	3 x 38,5	11,0	85 x 245	1,0	A
12,5	CSADG- 0,525/12,5 - HD	3 x 48,1	13,7	85 x 245	1,1	A
15	CSADG- 0,525/15 - HD	3 x 57,7	16,5	85 x 245	1,3	A
20	CSADG- 0,525/ 20 - HD	3 x 77,0	22,0	100 x 245	1,9	A
25	CSADG- 0,525/ 25 - HD	3 x 96,2	27,5	116 x 245	2,1	B
30	CSADG- 0,525/30 - HD	3 x 116	33,0	116 x 245	2,3	B
33,3	CSADG- 0,525/33,3 - HD	3 x 128	36,6	136 x 261	3,5	B
37,5	CSADG- 0,525/37, 5 - HD	3 x 144	41,2	136 x 261	3,6	B
40	CSADG- 0,525/40 - HD	3 x 154	44,0	136 x 261	3,7	B
50	CSADG- 0,525/50 - HD	3 x 193	55,0	136 x 355	5,5	C

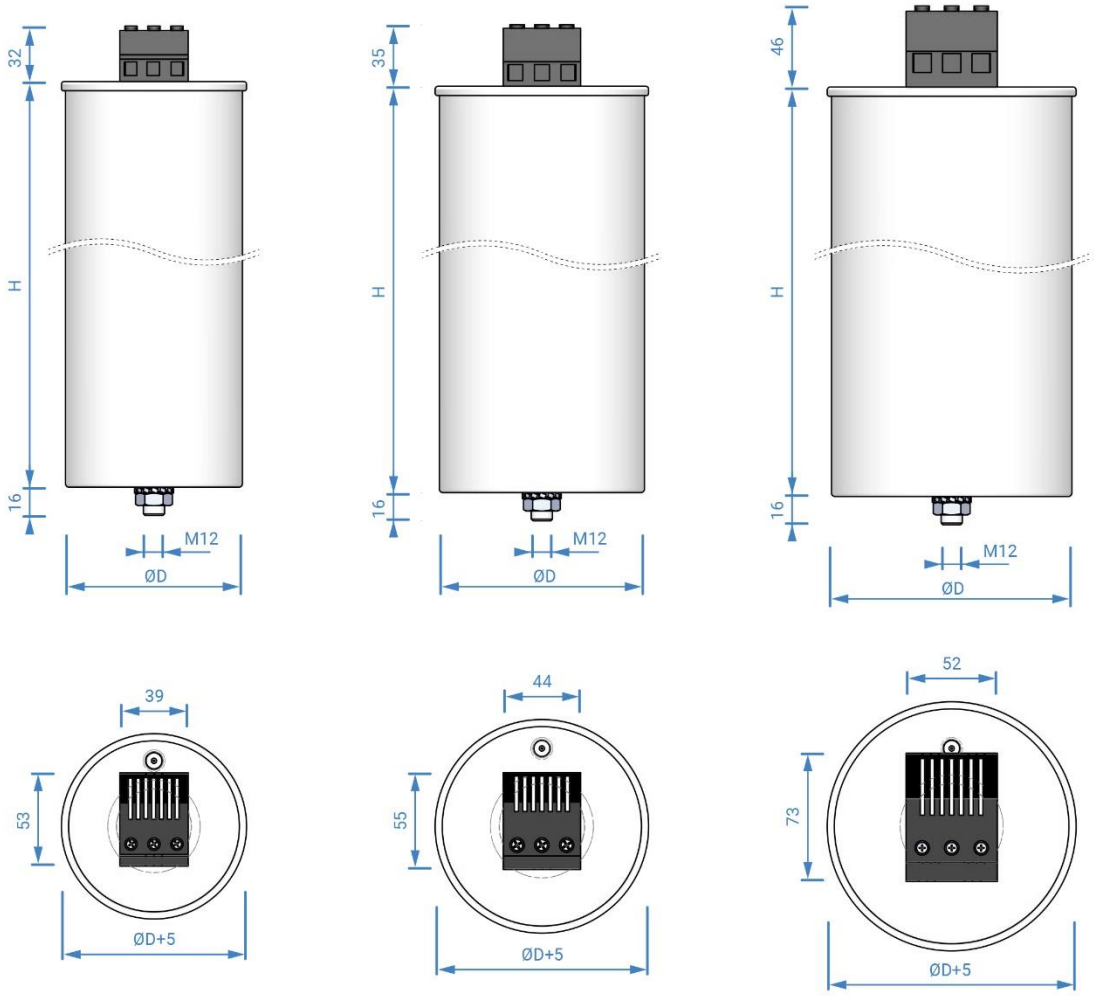

Terminal A Terminal B Terminal C

Terminal	A	B	C
Max. Cross section (mm^2)	16	25	35

ELINKS PAKISTAN

LV Power Capacitors

UHD - Ultra Heavy Duty

Three phase power capacitors, self-healing, semi dry resin

Features

Imax = 2,5 x IN

Lifetime Expectancy: > 180 000 h

Temperature Class: -40/D (60 °C)

Semi Dry type: semi-dry resin

For application with more demanding operating conditions.

THD-U $\leq$ **4**%

UHD - Ultra Heavy Duty

General Technical Parameters

Standard	IEC EN 60831-1/2, VDE 0560-46/47, GOST 1282-88
Rated Voltage	440 V, 525 V / 50 Hz
Rated Power	1 - 50 kvar
Capacitance Tolerance	-5 / +10 %
Max. Permissible Current	1,5 x I_N Continuous, 2,5 x I_N Short period*
Max. Inrush Current	400 x I_N
Capacitor Losses	cca 0,4 W / kvar
Discharge Resistors	built-in 75 V / 3 min
Statistical Life Expectancy	> 180 000 hours according to operating conditions
Protection Degree	IP 20 (IP 54 selected types on request)
Max. Relative Humidity	95 %
Cooling	Natural Air or Forced
Max. Altitude	4000 m
Mounting Position	Any position
Case	Aluminum can
Dielectric System	Dry metallized polypropylene
Impregnant / Filling	Semi Dry Resin
Safety Device	3 fuses overpressure disconnector
Terminals	One side - 3 clamps

Note: * Maximum current for 48 hours continuous operation with relation to highest mean ambient temperature of 45°C over period of 24 h

Overpressure disconnector function

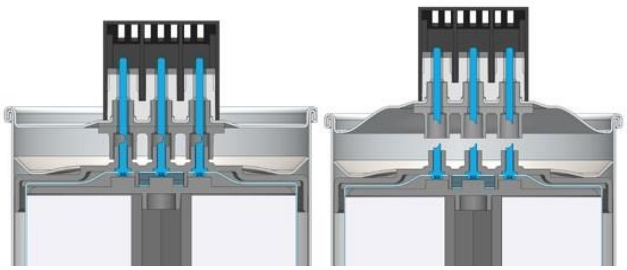

440 V / 50 Hz

Q_C (kvar)	Type	C_N (Δ) (μ F)	I_N (A)	Ø D x H (mm)	m (kg)	Terminal
6,25	CSADG- 0,4 4 /6,25 - UHD	3 x 34,3	8,2	85 x 175	1,1	A
7,5	CSADG- 0,4 4 / 7,5 - UHD	3 x 41,1	9,9	85 x 175	1,2	A
10	CSADG- 0,4 4 /10 - UHD	3 x 54,8	13,1	85 x 245	1,4	A
12,5	CSADG- 0,4 4 /12,5 - UHD	3 x 68,5	16,4	85 x 245	1,5	A
15	CSADG- 0,4 4 /15 - UHD	3 x 82,2	19,7	85 x 245	1,6	A
20	CSADG- 0,4 4 / 20 - UHD	3 x 110	26,2	100 x 245	2,5	A
25	CSADG- 0,4 4 / 25 - UHD	3 x 137	32,8	116 x 245	3,2	B
28,1	CSADG- 0,4 4 / 28,1- UHD	3 x 154	36,8	116 x 245	3,3	B
30	CSADG- 0,4 4 / 30 - UHD	3 x 164	39,4	116 x 245	3,3	B
40	CSADG- 0,4 4 /40 - UHD	3 x 219	52,5	136 x 261	4,0	B
50	CSADG- 0,4 4 /50 - UHD	3 x 274	65,6	136 x 355	5,0	C

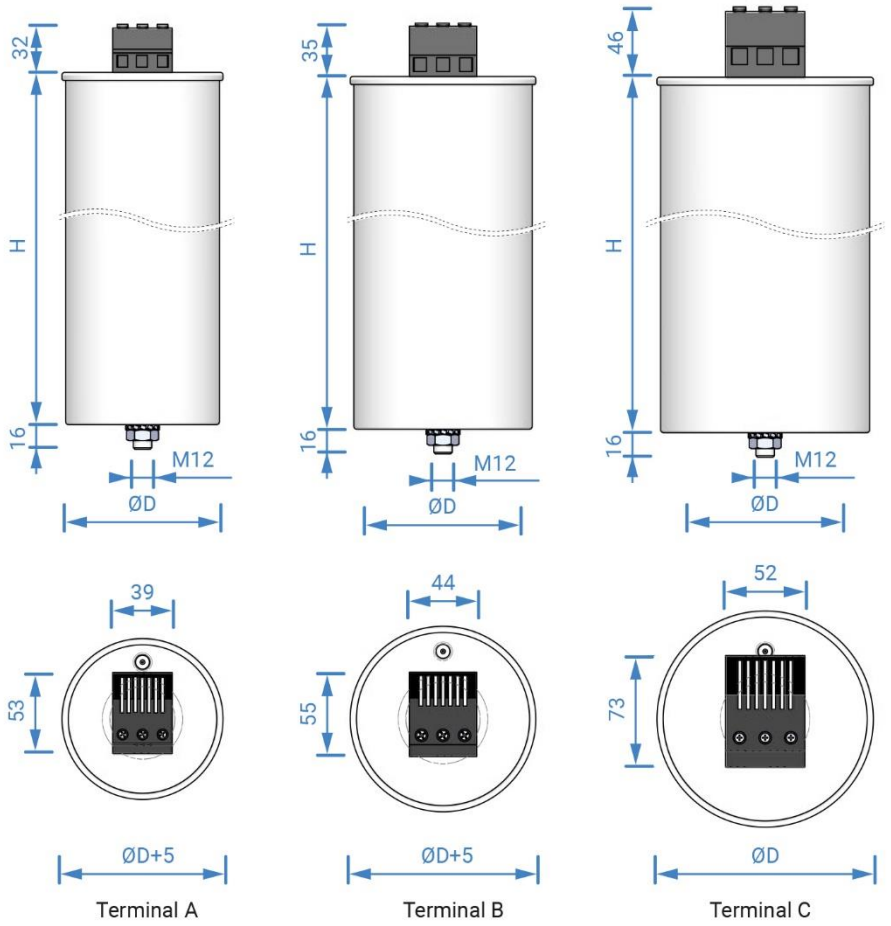

LV Detuning Reactors

LV Detuning Reactors

General Technical Parameters

Standard	IEC EN 60831-1/2, VDE 0560-46/47, GOST 1282-88
Rated Voltage	440 V, 525 V / 50 Hz
Rated Power	1 - 50 kvar
Capacitance Tolerance	-5 / +10 %
Max. Permissible Current	1,5 x I_N Continuous, 2,5 x I_N Short period*
Max. Inrush Current	400 x I_N
Capacitor Losses	cca 0,4 W / kvar
Discharge Resistors	built-in 75 V / 3 min
Statistical Life Expectancy	> 180 000 hours according to operating conditions
Protection Degree	IP 20 (IP 54 selected types on request)
Max. Relative Humidity	95 %
Cooling	Natural Air or Forced
Max. Altitude	4000 m
Mounting Position	Any position
Case	Aluminum can
Dielectric System	Dry metallized polypropylene
Impregnant / Filling	Semi Dry Resin
Safety Device	3 fuses overpressure disconnector
Terminals	One side - 3 clamps

Note: * Maximum current for 48 hours continuous operation with relation to highest mean ambient temperature of 45°C over period of 24 h

Applications

Frequent use of power electronic devices with nonlinear loads leads to harmonic distortion in electrical system. This non-sinusoidal load causes increase of effective current of power capacitor and other components of the system as well as the possibility of capacitor resonance with other inductive loads. Finally, it may lead to problems or even failures in the installation. The solution is to use detuning (filtering) reactors, which creates a series resonant circuit with power capacitors. This detuned system prevents the installation from resonance effect and also acts as a filter for higher harmonic content. Usually there is recommended to use detuning reactors for the total voltage distortion THD-U higher than 3 %.

Reactor power designation

Reactor type designation is always according to power of matching capacitor Q_C

Q_C - Rated power of the capacitor

Q_{LC} - Rated power of the detuned system (capacitor + reactor)

Power		Capacitance		Inductance	Current	Weight	Dimensions
Q_C (kvar)	Q_{LC} (kvar)	C_N (Δ) (μ F)	Type	L_N (mH)	I_N (A)	m (kg)	WxDxH (mm)
U_N = 400 V U_C = 440 V p = 7 % (189Hz) I_{lin} ≥ 1,6 I_N							
50	44,4	274	TKA1-50-189/400/440	0,86	64,1	23	250 x 185 x 215
56,2	50	308	TKA1-56,2-189/400/440	0,77	72,0	23	250 x 185 x 215

p = 7 %, U_N= 400 V, U_C= 440 V, I_{lin}≥ 1,6 I_N

Q_C (kvar)	Q_{LC} (kvar)	C_N (Δ) (μ F)	Type	L_N (mH)	I_N (A)	m (kg)	WxDxH (mm)	Design
5	4,4	27,4	TKC1-05-189/400/440	8,64	6,4	4,5	150 x 90 x 150	Cu / 1
6,25	5,6	34,3	TKC1-06,25-189/400/440	6,90	8,0	4,5	150 x 90 x 150	Cu / 1
10	8,9	54,8	TKC1-10-189/400/440	4,32	12,8	7,5	180 x 100 x 180	Cu / 1
12,5	11	68,5	TKC1-12,5-189/400/440	3,46	16,0	8,5	180 x 110 x 180	Cu / 1
15	13,3	82,2	TKC1-15-189/400/440	2,88	19,2	11	180 x 120 x 180	Cu / 1
20	17,8	110	TKC1-20-189/400/440	2,17	25,6	11	180 x 120 x 180	Cu / 1
25	22,2	137	TKC1-25-189/400/440	1,73	32,1	15	180 x 135 x 180	Cu / 1
25	22,2	137	TKA1-25-189/400/440	1,73	32,1	13	235 x 150 x 160	Al / 2
2 x 25	2 x 22,2	2 x 137	TKA1-2x25-189/400/440	1,73	32,1	25	235 x 150 x 290	Al / 2
28,1	25	154	TKA1-28,2-189/400/440	1,53	36,0	13	235 x 150 x 160	Al / 2
2 x 28,1	2 x 25	2 x 154	TKA1-2x28,1-189/400/440	1,53	36,0	25	235 x 150 x 290	Al / 2
30	26,7	164	TKA1-30-189/400/440	1,44	38,5	17	255 x 160 x 195	Al / 2
40	35,5	219	TKA1-40-189/400/440	1,08	51,3	18	255 x 160 x 195	Al / 2
50	44,4	274	TKA1-50-189/400/440	0,86	64,1	23	250 x 185 x 215	Al / 2
2 x 50	2 x 44,4	2 x 274	TKA1-2x50-189/400/440	0,86	64,1	40	250 x 185 x 380	Al / 2
56,2	50	308	TKA1-56,2-189/400/440	0,77	72,0	23	250 x 185 x 215	Al / 2
2 x 56,2	2 x 50	2 x 308	TKA1-2x56,2-189/400/440	0,77	72,0	40	250 x 185 x 380	Al / 2
75	66,7	411	TKA1-75-189/400/440	0,58	96,1	31	305 x 190 x 255	Al / 2
100	88,9	548	TKA1-100-189/400/440	0,43	128,0	34	305 x 190 x 255	Al / 2

p = 7 %, U_N= 400 V, U_C= 525 V, I_{lin}≥ 1,6 I_N

Q_C (kvar)	Q_{LC} (kvar)	C_N (Δ) (μF)	Type	L_N (mH)	I_N (A)	m (kg)	WxDxH (mm)	Design
12,5	7,8	48,1	TKC1-12,5-189/400/525	4,91	11,3	8,5	180 x 100 x 180	Cu / 1
25	15,6	96,2	TKC1-25-189/400/525	2,46	22,5	11	180 x 120 x 180	Cu / 1
50	31,2	192	TKA1-50-189/400/525	1,23	45,0	22	250 x 185 x 215	Al / 2
75	46,8	289	TKA1-75-189/400/525	0,82	67,6	23	250 x 185 x 215	Al / 2

p = 5,67 %, U_N= 400 V, U_C= 440 V, I_{lin}≥ 2,0 I_N

Q_C (kvar)	Q_{LC} (kvar)	C_N (Δ) (μF)	Type	L_N (mH)	I_N (A)	m (kg)	WxDxH (mm)	Design
6,25	5,5	34,3	TKC1-6,25-210/400/440	5,60	7,9	4,5	150 x 90 x 155	Cu / 1
12,5	11,0	68,5	TKC1-12,5-210/400/440	2,80	15,8	8,5	180 x 110 x 180	Cu / 1
25	21,9	137	TKA1-25-210/400/440	1,40	31,6	13	235 x 150 x 160	Al / 2
50	43,8	274	TKA1-50-210/400/440	0,70	63,2	23	250 x 185 x 215	Al / 2

p = 14%, U_N= 400 V, U_C= 480V, I_{lin}≥ 1,38 I_N

Q_C (kvar)	Q_{LC} (kvar)	C_N (Δ) (μF)	Type	L_N (mH)	I_N (A)	m (kg)	WxDxH (mm)	Design
12,5	10,1	57,5	TKC1-12,5-134/400/480	8,21	14,6	14	180 x 135 x 180	Cu / 1
25	20,2	115	TKA1-25-134/400/480	4,11	29,1	25	285 x 180 x 215	Al / 2
30	24,2	138	TKA1-30-134/400/480	3,42	35,0	25	285 x 180 x 215	Al / 2
50	40,4	230	TKA1-50-134/400/480	2,05	58,3	37	335 x 190 x 255	Al / 2
60	48,5	276	TKA1-60-134/400/480	1,71	69,9	37	335 x 190 x 255	Al / 2

p = 14%, U_N= 400 V, U_C= 525V, I_{lin}≥ 1,38 I_N

Q_C (kvar)	Q_{LC} (kvar)	C_N (Δ) (μF)	Type	L_N (mH)	I_N (A)	m (kg)	WxDxH (mm)	Design
12,5	8,4	48,2	TKC1-12,5-134/400/525	9,77	12,2	14	180 x 135 x 180	Cu / 1
25	16,8	96,4	TKC1-25-134/400/525	4,88	24,3	18	225 x 135 x 180	Cu / 1
37,5	25,3	144	TKA1-37,5-134/400/525	3,27	36,5	24	285 x 180 x 215	Al / 2
50	33,7	193	TKA1-50-134/400/525	2,46	48,7	27	300 x 185 x 215	Al / 2
75	50,6	289	TKA1-75-134/400/525	1,64	73,1	37	335 x 190 x 255	Al / 2

Terminal	1	2	3
Type	Terminal Block	Al bar	Cable Lug*

* optional, On request

Design Cu/1

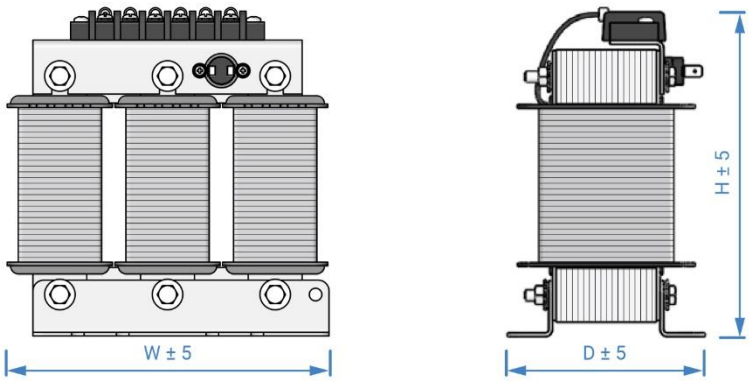

Design Al/2

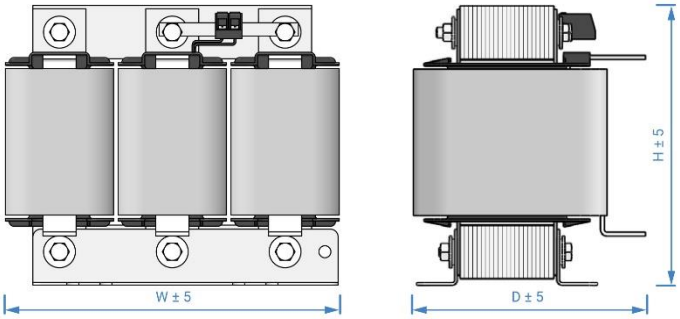

Design Al/2 - double

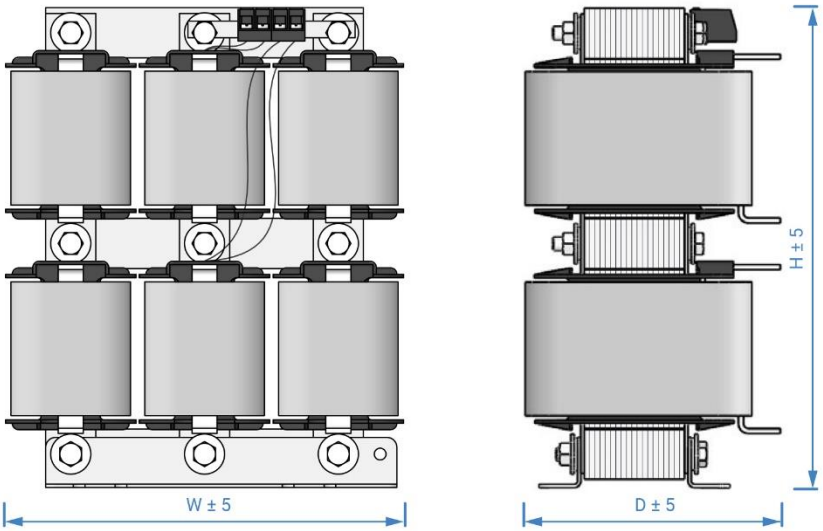

PFC Controllers

PFC Controllers

Technical Features

PFR6 / PFR12	
Measurement	THD
Temperature Measurement	No
Alarm Output	Yes
FCP System	Yes
Interface	No
4-Quadrant PFC	Yes
Supply and measuring Voltage	400 VAC (+15%/-10%), 50/60 Hz
Current Measurement Circuit	CT IN/5
Accuracy of voltage measurement	1%
Accuracy of current measurement	1%
Accuracy of cos measurement	±2%
Display	1 line, 3 digits, 7 segments, 20 icons
Output	Relays max. 250V, 10A, AC1
Protection degree	IP 51
Dimensions	144 × 144 × 62 mm
Connection	12 – Steps Regulator

PFC Controller PFR6/PFR12

PFR6/PFR12 is the type of power factor regulator designed for easy and effective regulation. Regulator monitors the power system status and takes decisions accurately and quickly on the connection or disconnection of compensation stages in order to reach the preset target cos phi.

Visit Our Website!

www.elinkspakistan.com

Lahore Office:	**1st and 3rd Floor, Khursheed Manzil, Carpet Chamber, 10 Abbot Road, Lahore, Pakistan**
Phone:	**+92-42-36361669, 36310561**
Mobile:	**+92-300-8454165, +92-333-4554454**
Email:	**mansoor@elinkspakistan.com** **muzamil@elinkspakistan.com** **mktelp@gmail.com**